aalberts integrated piping systems

VSH XPress



EN technical manual





contents

Aalberts integrated piping systems 4

VSH XPress 8

technical data 11

applications 12
fittings 15
tubes 19
press tools 25
installation guidelines 26
general technical information 29
built-in 36
corrosion 38
warranty 41

product range 43

VSH XPress Stainless 43
VSH XPress Stainless Gas 57
VSH XPress Carbon 65
VSH XPress Copper 79
VSH XPress Copper Gas 99
VSH XPress CuNi 107
VSH XPress valves 115
tools and accessories 161

Aalberts integrated piping systems

don’t just buy products, buy solutions.

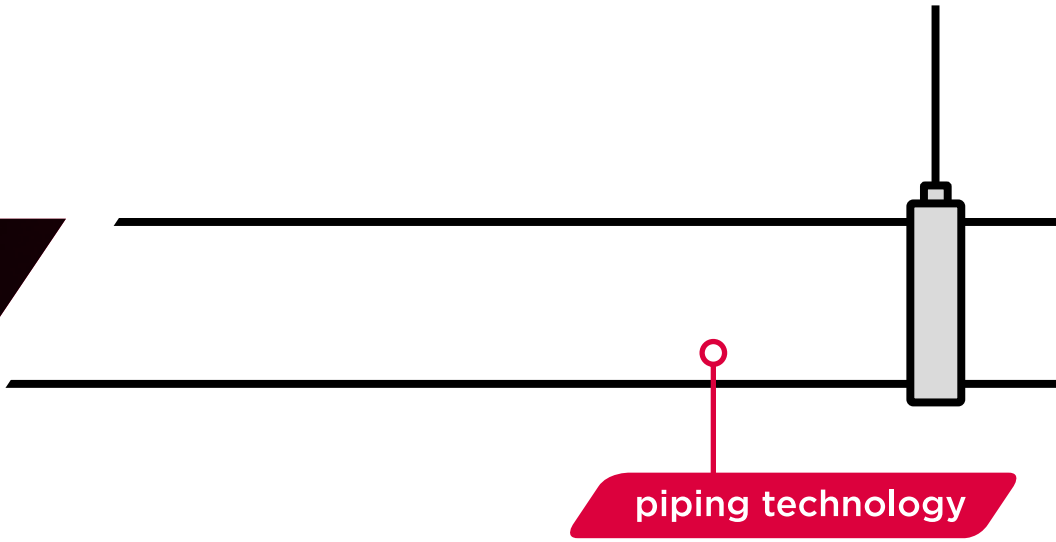

we are Aalberts integrated piping systems

Aalberts integrated piping systems engineers the most advanced integrated piping systems for the distribution and control of liquids and gases for key verticals, like industrial, utilities, commercial and residential. We offer fully integrated piping systems in valve, connection, fastening and piping technology. We work hand-in-hand with our customers to create the perfect integrated piping system, that meets their requirements. Our piping systems are easy to specify, install, control and maintain, saving important preparation and installation time. We meet the highest quality and industry standards needed in the selected verticals. We are the only business that truly offers its customers a single sourced and complete integrated piping solution, each and every time.
Don't just buy products, buy solutions.

our mission

With our integrated piping systems, supported by our unique Digital Design Service, we ensure that you will always get the best and easiest solution for the installation of an integrated piping system. From the moment that your plan is designed, you can get advice on complete and tailored solutions.
With our Revit Plug-in you have digital access to the complete product offering within Aalberts integrated piping systems. This information is always accessible and up to date, allowing the design of an optimal and economically attractive installation that will meet all your demands. So whether the task is project conception, installation, or on-going maintenance, we are the company that truly delivers a complete system and service offering. Our know-how, our can-do attitude, and our relentless innovation come as standard. We will sweat the small stuff in our quest to find the perfect solutions, even if we have to invent them.
This is how we deliver excellence.

our way of working

We operate from various regions around the globe: America, EMEA and APAC. As we have multiple locations in many countries, we are always close to our customers. More than 3500 mission critical employees are persistent to offer the best integrated piping system. We work on our products, solutions and services every day. No matter how big the opportunity is, when we say we've got this, we won't let go until there is nothing left to learn. We improve ourselves by exchanging knowledge and experience to stay ahead of our competitors.
Good is never good enough.

With our sustainable spirit we contribute to circularity every single day. This belief is strongly linked to the way we do business. Rethink, reduce and recycle. We are entrepreneurial and take ownership in everything we do. We are convinced that self-development and diversity is essential.
The Aalberts way, winning with people.

the strength of Aalberts integrated piping systems

- the perfect solution for every project
- smart, fast and efficient installation
- valuable advice from the drawing board to delivery
- a very wide product range

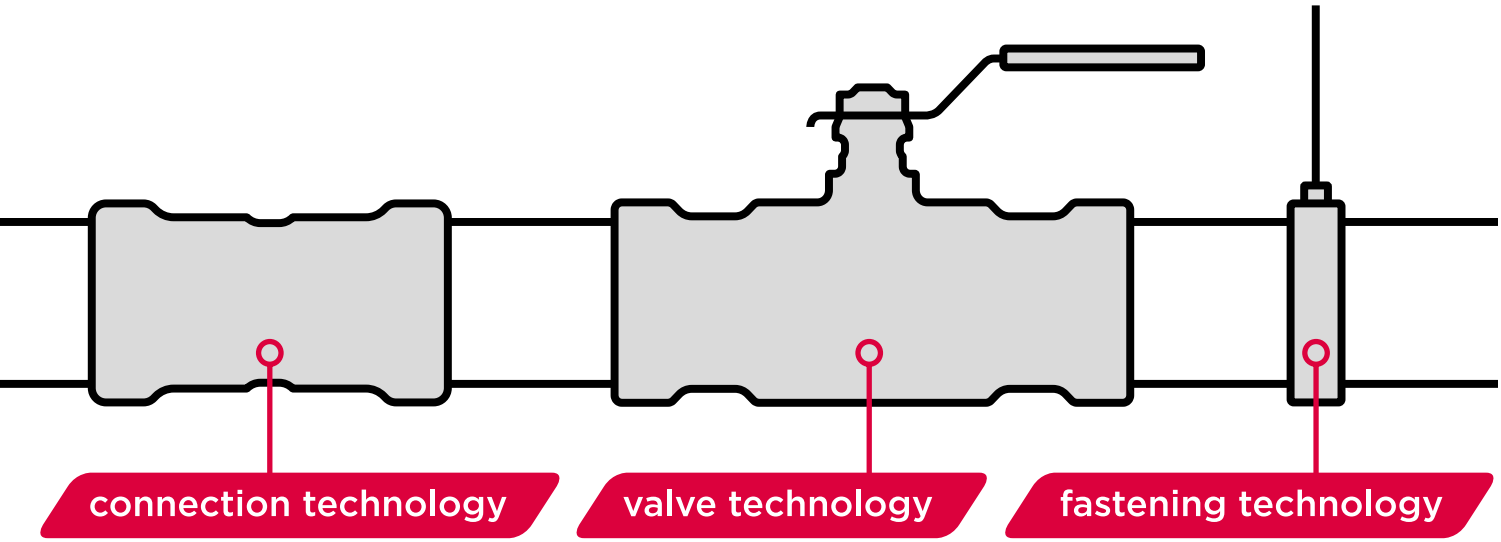

For more information about Aalberts integrated piping systems, go to www.aalberts-ips.eu

Aalberts integrated piping systems connect: our systems are easy to combine with each other

Aalberts integrated piping systems is the combination of different companies with a strong legacy in their markets. The individual brands are well-known and each represents a long history. Together they offer the best integrated piping system for now and in the future.

our product lines

We offer product ranges that:

- connect seamlessly
- are available in dimensions from 6 mm up to 104" (DN2600)
- can be used for thick-walled pipe and thin-walled metal or plastic tube
- have press, compression, groove and push connections
- can be expanded with valves and accessories
- are BIM ready

Connection technology

VSH

VSH has been supplying quality products for 90 years and delivers piping systems and fittings throughout the world. In the 1970's VSH brought the well-known VSH Super compression fitting on the market which is still a best-seller, followed by the VSH XPress pressfitting, a technology that makes it possible to realize a connection even faster and more reliable.

Shurjoint

The history of Shurjoint dates back to 1974, when the founders produced their first grooved couplings. These first couplings were produced from malleable iron, the casting material of choice at this time. Shurjoint is recognized as a world leader in the design and manufacture of mechanical piping components.

Valve technology

Apollo

Apollo Valves has been supplying the commercial and industrial valve markets since 1928. The valves, with their signature yellow handles, are designed and manufactured in their state-of-the-art facilities in the Carolinas, USA. Apollo's vertical manufacturing integration assures better quality control, better cost control, and the shortest delivery lead times possible for their range of ball valves, automation products, safety relief valves, backflow preventers and plumbing/heating products

VSH PowerPress®



material	carbon steel
suitable for	thick-walled steel
connection	press / DW-profile
dimensions	½" - 2" (DN15 – DN50)

VSH SudoPress



material	carbon steel / stainless steel / copper
suitable for	carbon steel / stainless steel / copper
connection	press / V-profile
dimensions	12 – 108 mm (DN10 – DN100)

VSH XPress



material	carbon steel / stainless steel / copper / cunifer
suitable for	carbon steel / stainless steel / copper / cunifer
connection	press / M-profile
dimensions	12 – 108 mm (DN10 – DN100)

VSH Shurjoint



material	ductile iron / stainless steel
suitable for	thick-walled steel / stainless steel / HDPE
connection	groove
dimensions	½" - 104" (DN15 – DN2600)

VSH Super



material	brass
suitable for	carbon steel / stainless steel / copper / plastic
connection	compression
dimensions	6 – 54 mm (DN4 – DN50)

VSH SmartPress



material	stainless steel
suitable for	stainless steel (schedule 5S/10S)
connection	press / V-profile (ASP)
dimensions	½" - 2" (DN15 – DN50)

Apollo Valves



material	brass / bronze / carbon steel / stainless steel
suitable for	steel / carbon steel / stainless steel / copper
connection	threaded / press / push / flange
dimensions	DN15 – DN300

Apollo ProFlow



material	brass / ductile iron
suitable for	carbon steel / stainless steel / copper / plastic
connection	threaded / press / flange
dimensions	DN15 – DN300

Seppelfricke



material	brass
suitable for	steel / carbon steel / stainless steel / copper
connection	press (V & M profile) / threaded
dimensions	10 – 54 mm (DN8 – DN50)

VSH MultiPress



material	PPSU / brass
suitable for	plastic
connection	press / U & TH profile
dimensions	14 – 63 mm (DN10 – DN50)

VSH UltraLine



material	PPSU / brass / PVDF
suitable for	plastic
connection	sliding sleeve
dimensions	14 – 32 mm (DN10 – DN25)

VSH Tectite



material	copper / brass / stainless steel
suitable for	copper / carbon steel / stainless steel
connection	push
dimensions	10 – 54 mm (DN8 – DN50)

VSH XPress

The VSH XPress product range consists of press fittings, tubes, valves and tools, available in four different materials: stainless steel, carbon steel, copper and cunifer. VSH XPress fittings incorporate an M-profile.

VSH XPress products are manufactured using unique, modern machinery. Our completely automated factories guarantees safe and high-quality products. All welded products undergo a leak test in order to avoid any problems afterwards when installed.

VSH XPress system offers installers a complete solution with great flexibility. Tubes from other manufacturers may also be used under certain circumstances. Furthermore, VSH XPress fittings can also be pressed using various brands of press tools.

advantages of the VSH XPress system

- simple, fast connection technology
- complete piping system available in 4 materials
- fittings and tubes from 12 to 108 mm (incl. intermediate sizes: 64 and 66.7 mm for copper, and 66.7 mm for carbon steel)
- systems: Carbon, Stainless, Stainless Gas, Copper, Copper Gas and CuNi
- pre-marked insertion depth on Carbon and Stainless
- clear identification of materials and dimensions
- Leak Before Pressed function
- professional and appropriate press tools
- BIM ready

advantages



performance guaranteed:
We guarantee a consistent quality and supply, with all fittings being manufactured in Europe. In order to ensure high-value manufacturing, we employ laser-welding technology and all fittings (100%) undergo leak testing. The leak testing is fully automated and incorporated in the laser-welding process. All reducers and straight connectors with threaded ends are made from a single piece so there is no risk of leakage and are more compact which has benefits for recessed piping work. The smooth surface of the fittings and tubes means that flow characteristics are better than traditional piping systems. The quality of our fittings is also testified by the large number of national and international approval bodies. A wide range of system and product tests are available, with certificates for potable water, gas installations, shipbuilding and sprinkler systems.



reliable:
With VSH XPress systems, the quality of the connection is mainly determined by the tool and not the installer, thereby considerably reducing the risk of errors during installation. All fittings are fitted with a Leak Before Pressed (LBP) function, which reduces the risk even further. This LBP function ensures that fittings, which have not been pressed, will leak during the

initial pressure test. The installer can immediately identify which fittings are not pressed. Once pressed, the system is guaranteed airtight and watertight.

insertion depth marking
Safe and secure connections depend on correct insertion depths. However, marking the insertion depth is a very time-consuming task and for that reason, all stainless steel and carbon steel fittings with tube ends supplied by Aalberts integrated piping systems are marked with a clearly visible insertion depth mark (12 to 54 mm). This means that 25% of all VSH XPress fittings no longer have to be marked by the installer. A smart benefit from VSH XPress, which makes installations much easier, saves a lot of time and results in greater safety.

easy and clean:
Compared to other 'cold' connection methods, VSH XPress is an extremely user-friendly solution:
- the use of VSH XPress dispenses with the need for complicated fastening techniques, time-consuming preparations and drying times – installation is faster and cleaner.
- no need to thread the tubes.
- no lubrication needed for installation.
- easy insertion of the tube into the fitting due to the special design of the fittings.
- short radius bends ensure compact and space-saving installation.

the above features ensure that no special skills are required for installation and can be carried out in a pleasant and safe environment.

safe:
The installation of the VSH XPress system does not require any heat source (for example welding or soldering) or other heavy and potentially dangerous tools. This feature makes VSH XPress the ideal solution for repairs or renovation projects, as it ensures a minimum of disturbances at the site. Moreover, the light weight of the precision steel tubes means labour conditions are still further improved and a contribution is made to a healthier way of working.

fast:
This simple, fast connection technology and the short tube preparation time result in further considerable savings in the installation costs. As the connection is only achieved using press tools, no other materials, such as gases, adhesives, threading machines, etc., need to be purchased or hired.

advantages of the M-profile:
- the o-ring is pressed perpendicularly into the tube. This results in a seamless transition between fitting and tube that prevents leakages and any dust or dirt from getting into the joint.
- the o-ring bead creates an extra mechanical connection between fitting and tube.
- during pressing, pressure is applied to the o-ring from three angles, which results in a robust deformation of the o-ring bead and an extremely secure connection.
- due to the positioning of the o-ring at the beginning of the fitting, the o-ring can be clearly seen by the installer. This results in a safer installation process as any damage can be immediately spotted; the same is the case if the ring is wrongly placed.
- no chances of leakage due to the very accurate press profile (M-profile).

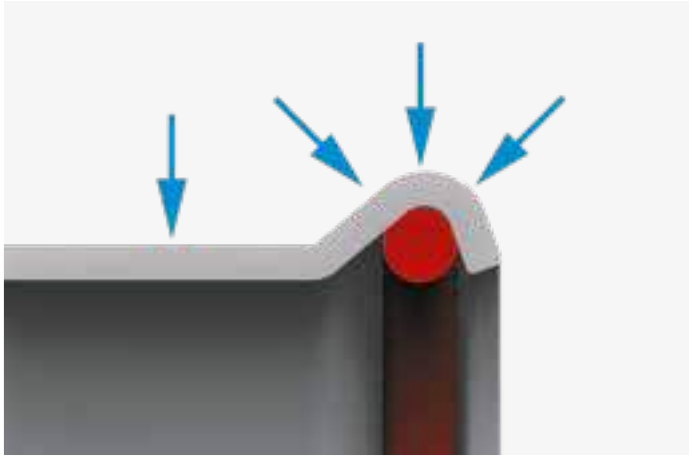

more VSH XPress benefits

The VSH XPress system is a complete range of fittings, tubes, valves and tools, easily recognisable due to laser markings. The correct VSH XPress jaws and slings are recognized by the 'X' symbol that is left on the surface of the fitting after pressing.



Major benefits are to be gained by using the complete VSH XPress system (fittings, tubes, valves and tools).

- the combination of fittings, tubes, valves and tools is an optimal match and ensures high quality connections.
- the 'X' immediately shows that the jaws and slings used are the correct choice for the job. It is a 100% guarantee that those jaws and slings match the VSH XPress system.
- it offers the possibility of having higher working pressures depending on the application (25 bar or even higher).
- the application areas of VSH XPress are very extensive: sprinkler systems, shipbuilding, high-pressure applications, etc.
- all VSH XPress Stainless and carbon steel tubes are delivered with plastic end-caps in order to prevent dirt from getting into the tubes. The cap colour specifies the type of tube material.

references

VSH XPress is being used all over the world in the widest range of applications and types of buildings.







VSH XPress

technical data

applications

potable water installations

VSH XPress Stainless fittings with stainless steel tubes that fulfil EN 10312, DVGW worksheet W534 - GW541 and for Switzerland, SVGW W/TPW 132 (10/04).

o-rings:	EPDM* (black)
operating temperature:	-35°C to +135°C
max. temperature:	150°C (short-term)
max. operating pressure:	16 bar

VSH XPress Copper fittings with copper tubes that fulfil EN 1057.

o-rings:	EPDM (black)
operating temperature:	-20°C to +110°C
max. temperature:	130°C (short-term)
max. operating pressure:	16 bar

In potable water installations with VSH XPress Stainless fittings and tubes, the content of water-soluble chloride ions may not exceed 250 mg/l.

heating installations

VSH XPress Carbon fittings with carbon steel precision tubes that fulfil EN 10305-3 or VSH XPress Stainless fittings with stainless steel tube that fulfil EN 10312.

o-rings:	EPDM (black)
operating temperature:	-35°C to +135°C
max. temperature:	150°C (short-term)
max. operating pressure:	16 bar

VSH XPress Copper fittings with copper tubes that fulfil EN 1057.

o-rings:	EPDM (black)
operating temperature:	-20°C to +110°C
max. temperature:	130°C (short-term)
max. operating pressure:	16 bar

* Ethylene Propylene Diene Monomer

cooling installations

VSH XPress Carbon fittings with carbon steel precision tubes that fulfil EN 10305-3 in closed-loop systems or VSH XPress Stainless fittings with stainless steel tubes that fulfil EN 10312 in closed-loop and open systems.

o-rings:	EPDM (black)
operating temperature:	-35°C to +135°C
max. temperature:	150°C (short-term)
max. operating pressure:	16 bar

VSH XPress Copper fittings with copper tubes that fulfil EN 1057 in closed-loop and open systems.

o-rings:	EPDM (black)
operating temperature:	-20°C to +110°C
max. temperature:	135°C (short-term)
max. operating pressure:	16 bar

In cooling water installations with VSH XPress Stainless fittings and tubes, the content of water-soluble chloride ions may not exceed 250 mg/l.

gas installations

VSH XPress Stainless Gas fittings with stainless steel tubes that fulfil DVGW worksheet VP614, SVGW Data sheet G1/01 and ÖVGW PG 314.

o-rings:	HNBR** (yellow)
operating temperature:	-20°C to +70°C
max. operating pressure:	5 bar inside and outside
application:	inside (HTC***, proven tightness of the connection at 650°C for 30 min) or outside buildings. Outside of buildings, only lay above ground. Local regulations must always be observed.

VSH XPress Copper Gas fittings with copper tubes that fulfil EN 1057.

o-rings:	NBR**** (yellow)
operating temperature:	-20°C to +70°C
max. operating pressure:	5 bar inside and outside
application:	inside (HTC, proven tightness of the connection at 650°C for 30 min) or outside buildings. Outside of buildings, only lay above ground. Local regulations must always be observed.

** Hydrogenated Nitrile Butadiene Rubber
*** Higher Thermal Capacity
**** Nitrile Butadiene Rubber

steam installations

VSH XPress Stainless fittings with stainless steel tubes that fulfil EN 10312.

o-rings:	FPM* (grey)
operating temperature:	-20°C to +144°C
max. operating pressure:	4 bar

compressed air installations

VSH XPress Carbon fittings with carbon steel precision tubes that fulfil EN 10305-3 or VSH XPress Stainless fittings with stainless steel tube that fulfil EN 10312.

according to ISO 8573:2010 part 1, please use o-rings for compressed air as follows:

VSH XPress Stainless:	moisture class 0-x, oil class 0-4 EPDM + 0-5 FPM
VSH XPress Copper:	moisture class 0-x, oil class 0-4 EPDM + 0-5 FPM
VSH XPress Carbon:	moisture class 0-7, oil class 0-4 EPDM + 0-5 FPM

If the maximum water content is exceeded, copper or stainless steel must be used. If the compressed air contains mineral or vegetable oil, then HNBR or FPM o-rings are to be used. EPDM o-rings may only be used for synthetic oil or dry compressed air (not exceeding 5 mg/m^3).

o-rings:	EPDM (black)
operating temperature:	-35°C to +135°C
max. operating pressure:	12-54 mm 16 bar 66.7 - 108 mm 10 bar

o-rings:	HNBR (yellow)
operating temperature:	-20°C to +70°C
max. operating pressure:	12-54 mm 16 bar 66.7 - 108 mm 10 bar

o-rings:	FPM (green)
operating temperature:	-20°C to +200°C
max. temperature:	230°C (short-term)
max. operating pressure:	12-54 mm 16 bar 66.7 - 108 mm 10 bar

VSH XPress Copper fittings with copper tubes that fulfil EN 1057.

o-rings:	EPDM (black)
operating temperature:	-20°C to +110°C
max. operating pressure:	10 bar

o-rings:	HNBR (yellow)
operating temperature:	-20°C to +70°C
max. operating pressure:	10 bar

o-rings:	FPM (green)
operating temperature:	-20°C to +200°C
max. temperature:	230°C (short-term)
max. operating pressure:	10 bar

Compressed air piping systems must be properly tested as soon as the installation work is finished. The system designer and installation contractor must ensure safe methods are selected for testing the system. The methods must comply with all current health and safety regulations. They may include testing compressed air lines with fluids or compressed air at a specific pressure, or a combination of both. We recommend that the maximum working pressure of the product is not exceeded during this process.

Since 30 May 2002, most pressure equipment and installations on the market have had to comply with the Pressure Equipment Directive (PED) 1999. The Directive concerns items such as vessels, pressurized storage containers, heat exchangers, steam generators, boilers, industrial piping, safety equipment and pressure accessories.

Please note that Article 3(3) of the PED applies to VSH XPress. This means that only sound design and safe instructions for use and maintenance are required.

sprinkler installations

VSH XPress Carbon fittings with VSH XPress Carbon Sendzimir precision tubes that fulfil EN 10305-3 or VSH XPress Stainless fittings with VSH SudoXPress Stainless tubes, which are VdS, FM and LPCB approved.

o-rings:	EPDM (black)
operating temperature:	-35°C to +135°C
max. temperature:	150°C (short-term)
operating pressure:	Max. 16 bar (depending on application and dimensions)

VSH XPress Sprinkler is suitable for both wet and dry fixed sprinkler systems. For more information regarding VSH XPress Sprinkler, please consult the technical manual 'VSH Fire Protection', which is available upon request or can be downloaded from our website www.aalberts-ips.eu.

* Fluoride Elastomer

solar installations

VSH XPress Carbon fittings with carbon steel precision tubes that fulfil EN 10305-3 or VSH XPress Stainless fittings with stainless steel tubes that fulfil EN 10312.

o-rings:	FPM (green)
operating temperature:	-20°C to +200°C
max. temperature:	230°C (short-term)
max. operating pressure:	16 bar
application:	VSH XPress Carbon for closed-loop systems inside buildings; VSH XPress Stainless for both open and closed-loop systems.

VSH XPress Copper fittings with copper tubes that fulfil EN 1057 R250/R290.

o-rings:	FPM (green)
operating temperature:	-20°C to +200°C
max. temperature:	230°C (short-term)
max. operating pressure:	10 bar

industrial installations

VSH XPress Carbon fittings with carbon steel precision tubes that fulfil EN 10305-3 in closed-loop systems or VSH XPress Stainless fittings with stainless steel tubes that fulfil EN 10312 in closed-loop and open systems.

o-rings:	EPDM (black)
operating temperature:	-35°C to +135°C
max. temperature:	150°C (short-term)
max. operating pressure:	25 bar (higher pressure available depending on application and dimensions) for carbon steel press fittings up to 54 mm and stainless steel press fittings up to 108 mm.

It may be possible to have higher working pressures depending on the different safety factors that may apply in industrial applications. For pressures higher than 16 bar, tools and machines must be used according to the prescribed range for VSH XPress Sprinkler. Please see the technical manual 'VSH Fire Protection', which is available upon request and can be downloaded from our website www.aalberts-ips.eu.

VSH XPress Carbon, Copper and Stainless are suitable for vacuum applications with a (relative) pressure down to -0.85 bar. For applications other than water, such as oil, fuel and hydrocarbons, the (green) FPM o-ring must be used.

shipbuilding

VSH XPress Carbon fittings with VSH XPress Carbon precision tubes that fulfil EN 10305-3 or VSH XPress Stainless fittings with VSH SudoXPress Stainless tubes that fulfil EN 10312, certified by Bureau Veritas, DNV-GL, Lloyd's Register and RINA.

o-rings:	EPDM (black)
operating temperature:	-35°C to +135°C
max. temperature:	150°C (short-term)
max. operating pressure:	16 bar (operating pressures depending on application and dimensions)

o-rings:	FPM (green)
operating temperature:	-20°C to +200°C
max. temperature:	230°C (short-term)
operating pressure:	max. 16 bar

VSH XPress CuNi fittings with VSH XPress CuNi tube which are certified by Bureau Veritas, DNV-GL, Lloyd's Register and RINA.

o-rings:	NBR (brown)
operating temperature:	-20°C tot +95°C
max. temperature:	110°C (short-term)
max. operating pressure:	16 bar

VSH XPress Copper fittings, certified by DNV-GL with copper tubes that fulfil EN 1057 in closed and open systems.

o-rings:	EPDM (black)
operating temperature:	-24°C to +120°C
max. temperature:	135°C (short-term)
max. operating pressure:	16 bar

The shipbuilding applications are valid only if the pressing machines, jaws and slings used are in accordance with the VSH XPress Sprinkler range (with the exception of VSH XPress Copper). Please contact Aalberts integrated piping systems for further information on VSH XPress in shipbuilding applications.

fittings

technical characteristics



VSH XPress Stainless fittings
Produced from 1.4404 materials and fitted with a 'Leak Before Pressed' (LBP) function. The sizes 12-54 mm fittings are fitted with an EPDM 'Leak Before Pressed' (LBP) o-ring (see page 17 for more detailed information). Fittings in sizes 76.1-108 mm are fitted with a standard EPDM o-ring.

VSH XPress Stainless Gas fittings
Produced from 1.4404 materials, in accordance with DIN 10088 and are fitted with a HNBR o-ring (yellow).

VSH XPress Carbon fittings
Produced from RSt 34-2 steel and protected against corrosion by a zinc coating that has been applied thermally. The zinc coating provides limited protection against short-term exposure to moisture if the fittings are able to dry out again quickly afterwards. The sizes 12-54 mm fittings are fitted with an EPDM 'Leak Before Pressed' (LBP) o-ring. Sizes 66.7-108 mm fittings are fitted with a standard EPDM o-ring.

VSH XPress Copper fittings
Produced from CU-DHP copper, CW024A materials and CC499K bronze, fitted with an EPDM o-ring as standard.

VSH XPress Copper Gas fittings
Produced from CU-DHP copper, CW024A materials and CC499K bronze materials and fitted with a HNBR o-ring (yellow).

VSH XPress CuNi fittings
Produced from a copper-nickel alloy (90/10) and fitted with an NBR o-ring (brown).

Note: For VSH XPress Stainless Gas also observe the local approvals for the released tools. All approved press tools to fit the right product are found in our online tool selector, available on our website: www.aalberts-ips.eu/tool-selector

Note: when using VSH XPress Stainless and Carbon for sprinkler installations, please make sure to follow the guidelines for installation and use approved tools. These can be found in the technical manual 'VSH Fire Protection', which is available upon request or can be downloaded from our website www.aalberts-ips.eu.

approvals

VSH XPress fittings are tested and approved for potable water installations, gas installations, sprinkler installations and many more. The applications for which VSH XPress fittings are currently approved are listed in the table.

approval body	VSH XPress Stainless	VSH XPress Carbon	VSH XPress Copper	VSH XPress CuNi
ARGB-KVBG	15-54 mm (gas)		15-28 mm (gas)	
ATG	12-108 mm	12-108 mm		
BSI	15-108 mm (gas)		12-108 mm (water) 15-108 mm (gas)	
Bureau Veritas	15-108 mm	12-108 mm*		15-108 mm
CSN			12-108 mm (water) 15-108 mm (gas)	
CSTB	12-108 mm	12-108 mm	12-108 mm	
CNBOP	22-108 mm	22-54 mm		
DNV-GL	15-108 mm	12-108 mm*	12-108 mm	15-108 mm
DVGW	12-108 mm (water) 15-108 mm (gas)		12-108 mm (water) 15-54 mm (gas)	
ÉMI			12-108 mm	
ETA	15-108 mm			
FG	22-108 mm			
FM	22-108 mm			
Gastec QA			15-54 mm (gas)	
INIG			15-54 mm (gas)	
Kiwa	15-108 mm		12-54 mm	
LPCB	22-54 mm	22-54 mm		
Lloyd's Register	15-108 mm	12-108 mm*		15-108 mm
ÖVGW**	12-108 mm (water) 15-108 mm (gas)		12-108 mm (water) 15-54 mm (gas)	
PZH	15-108 mm			
RINA	15-108 mm	15-108 mm*		15-108 mm
SBSC	22-108 mm	22-108 mm*		
SINTEF	12-108 mm		12-108 mm	
SITAC/RISE	15-108 mm	12-108 mm*	12-108 mm	
SPF	12-54 mm	12-54 mm		
SVGW	12-108 mm (water) 15-108 mm (gas)			
TA-luft	15-108 mm			
VdS	22-108 mm	22-108 mm*		
WRAS	15-108 mm		12-108 mm	

*66.7 mm is not approved
**fittings only to be used with ÖVGW certified tubes

threaded fittings

The VSH XPress product range also includes components with female and male threads. VSH XPress Stainless, Carbon and Copper fittings with female and male threads are manufactured in accordance with DIN 2999/ISO 7/1.
Hemp or other chloride-free sealants are suitable for the threads of VSH XPress Stainless fittings. PTFE sealing tape may not be used in conjunction with stainless steel due to the water soluble chloride ions it contains. With threaded fittings, we recommend that sealing is to be executed before the pressing, in order not to stress the press connection.

screw fittings (copper)



Manufacturers of gas heating appliances supply their products with the respective screw connections in place. G6360-type 'half screw fittings' may, therefore, be used as press connections to already-present screw connections.
The half screw fitting (G6360), as well as the G6340 screw fitting with a double-sided press end, is also approved in accordance with DIN 3436 HTC.

bronze threaded transition fittings

Threaded transition fittings are generally manufactured from gunmetal. A distinction is made in this case between strand or continuous casting (straight joints) and mould casting (bends, tees and wall plates). Tests have shown that mould cast (sand cast) press fittings are less suitable for gas installations for the following reasons: mould casting joints can never be as leak-proof (homogenous) as strand cast or copper ones. There is always, in particular, a danger of air cavities despite 100% impermeability testing. Additionally, the mechanical load of the pressing heightens these dangers as it may cause cavities to burst open. Therefore, for safety reasons, Aalberts integrated piping systems decided not to include any mould-cast parts in the range of copper gas press fittings.

markings

VSH XPress Stainless fittings



marking	packaging label
VSH XPress green ring or sticker 316L approvals dimension	type R..... dimension description EAN no. art. no. approvals quantity

VSH XPress Stainless Gas fittings



marking	packaging label
VSH XPress yellow marking GAS, GT5/PN5 316L dimension DVGW	type R.....G dimension description EAN no. art. no. approvals quantity

VSH XPress Carbon fittings



marking	packaging label
VSH XPress red ring or sticker galvanized approvals dimension	type C..... dimension description EAN no. art. no. approvals quantity

VSH XPress Copper fittings



marking	packaging label
XPress approvals dimension	type ..... dimension description EAN no. art. no. approvals quantity

VSH XPress Copper Gas fittings



marking	packaging label
VSH XPress dimension yellow marking Gas PN5 GT/1 MOP5 T2 approvals	type G..... dimension description EAN no. art. no. approvals quantity

VSH XPress CuNi fittings



marking	packaging label
dimension	type CUN..... dimension description EAN no. art. no. approvals quantity

o-rings

The standard fittings for potable water and heating are fitted with EPDM o-rings. The type of o-ring which has to be used depends on the application and the medium. That is why gas press fittings are fitted with (H)NBR o-rings. For special applications, such as media containing oil or use at high temperatures, an FPM o-ring has to be fitted. If your application is not listed in the table below, please contact us to find out whether the medium is suitable for use in combination with the type of press fitting you are using. O-rings for VSH XPress Copper fittings are lubricated during production. Drying out must be prevented by storing them in the original packaging.

EPDM 'leak before pressed' (LBP) - black



temperature	applications
-35°C to +135°C short-term 150°C	KTW recommended. For all installations for potable water and conditioned water, hot water, circulation tubes, fire mains, etc.

EPDM (copper only) - black



temperature	applications
-20°C to +110°C short-term 135°C	KTW recommended. For all installations for potable water and conditioned water, hot water, circulation tubes, fire mains, etc.

EPDM - black



temperature	applications
-35°C to +135°C short-term 150°C	KTW recommended. For all installations for potable water and conditioned water, hot water, circulation tubes, fire mains, etc.

FPM 'leak before pressed' (LBP) - green



temperature	applications
-20°C to +200°C short-term 230°C	installations for compressed air, fuel oil, vegetable oil, fuels, greases and industrial purposes, ozone-resistant (industrial design). Not suitable for hot water applications.

FPM 'leak before pressed' (LBP) - grey



temperature	applications
-20°C to +144°C	steam installations

HNBR - yellow



temperature	applications
-20°C to +70°C	Installations for combustible gases: natural gases and liquid gases in accordance with Worksheet DVGW-G260 I/II. Installations for natural gas in accordance with Worksheet DVGW-TRGI 2018, and liquid gases in accordance with DVFG-TRF 2021.

NBR - yellow



temperature	applications
-20°C to +70°C	installations for combustible gases: natural gases and liquid gases in accordance with DVGW-TRGI 2018, and for liquid gases in accordance with DVFG-TRF 2021

NBR - brown



temperature	applications
-20°C to +95°C	installations for sea water, brackish water, cooling, ballast, fire protection, desalination and other fluids such as oil and fuels

Leak Before Pressed function

VSH XPress Stainless, Carbon and Copper fittings are delivered with a Leak Before Pressed function (LBP) for all dimensions. Fittings with a Leak Before Pressed function have the advantage that connections that have not been pressed will leak water during pressure testing. This means that an incomplete press connection can easily be identified. If correctly assembled, the press fittings will be water and air tight after being pressed.



advantages Leak Before Pressed

- additional safety: (installation) mistakes are prevented, as it will leak until pressed.
- easy: easy to recognize non pressed connections because of guaranteed water leakage during pressure test.
- warranty: guaranteed watertight and airtight once the fitting has been pressed.
- strength: extra material for leak function results in a strong o-ring in contrast to solutions where material is removed.

how the VSH XPress Carbon and Stainless LBP o-rings (12-54 mm) works

The design of the VSH XPress LBP o-ring is based upon the creation of a leak path on the o-ring itself. Small grooves have been created at 3 strategic points on the surface of the o-ring by adding additional material. This results in an exceptionally strong o-ring without any weak points.

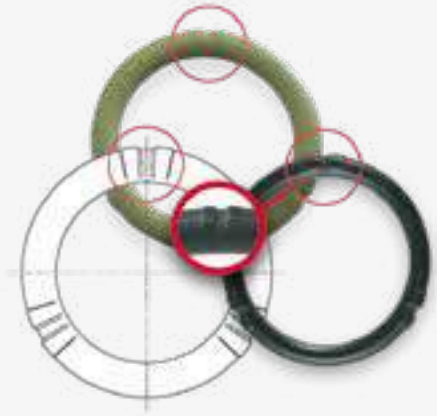

A pair of small bumps on the surface of the o-ring create a small opening where water will flow through as long as the fitting is not pressed. When pressure is increased, the fitting will start to leak. When pressed, the o-ring is deformed and, as a result, the rubber from the raised surfaces fills the gaps between them. This creates a fully watertight and airtight connection.

VSH XPress Copper with LBP function

The mechanical properties of copper differ from those of carbon steel and stainless steel. Copper is a softer material, which makes it possible to create a LBP function in the material itself (o-ring bead) instead on the o-ring. The LBP function on the VSH XPress Copper is created by a triangle shaped o-ring bead, which will leak as long as the joint has not been pressed. The function of this design is the same as the function of the LBP o-ring for carbon steel and stainless steel, which is to localize forgotten pressings and prevent errors in the installation process.

how the VSH XPress Copper LBP function works (12-54 mm)

The triangle shaped o-ring bead leaves a space between the tube and the fitting at 3 points in the o-ring bead. These gaps allow water to flow through as long as the fitting has not pressed. The advantage of this design is that there is still enough contact between the tube and the o-ring to ensure that the tube stays in place once assembled.

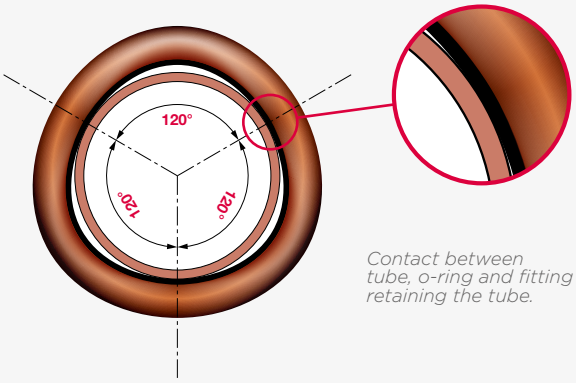

Contact between tube, o-ring and fitting retaining the tube.

Pressing changes the shape of the o-ring bead so that it becomes round again (given the mechanical properties of copper, it is very easy to change its triangular shape into a perfect round shape again). This gives a water and air-tight connection, once pressed.

how the VSH XPress Carbon, Stainless and Copper LBP function (64-108 mm) works

The use of the LBP-o-rings for these dimensions is based on the tolerance between the diameter of the o-rings and the inner diameter of the fitting, which will cause the fitting to leak as long as it has not been pressed.

tubes

alternative VSH XPress applications

the choice of fittings and tubes depends on what the purpose of the system is, the medium and the operating conditions. Please contact Aalberts integrated piping systems regarding approval for the use of VSH XPress fittings for applications other than for water, compressed air and gas. Installations must always comply with local regulations.

electrical heat tracing

electrical heat tracing can be attached directly to the tube according to the manufacturer's instructions.
VSH XPress Stainless, Carbon steel and Copper tube may be used with electrical heat tracing in order to maintain the temperature of the piping system. In case of VSH XPress Stainless, electrical heat tracing may be used to maintain the temperature of the piping system provided the medium does not continuously exceed 60°C.

equipotential bonding

All metal piping systems using equipotential bonding must comply with equipotential bonding requirements. Continuity checks must be conducted by a qualified electrician in accordance with the regulations, once the installation work has been finished. VSH SudoXPress Carbon, Stainless and copper tubes that fulfil EN 1057 used in combination with the respective fittings are electrical conductive tube systems and, therefore, must be included in the equipotential bonding.

VSH SudoXPress Carbon with polypropylene coating is not an electrical conductive system and so does not need to be included in the equipotential bonding.



stainless steel tubes

VSH SudoXPress Stainless tubes are stainless steel precision tubes. The inner and outer surfaces of the tubes are blank, free of discolouration and are supplied free of manufacturing residue that could cause corrosion. The possibility of any dirt or dust getting into the tubes during transport or when stored is avoided by plastic protection caps on both ends of the tube. This section describes all technical information that is elevant when working with VSH SudoXPress Stainless tubes.

insulation

The following regulations apply to the insulation of potable water piping systems:

- cold water lines must be protected against condensation and overheating in accordance with DIN 1988, Part 200. For installations in the Netherlands, the 'Water Work Sheets' must be followed.
- hot water lines must be insulated to prevent heat loss in accordance with the Energy-Conservation Act (EnEG). For installations in the Netherlands, the 'Water Work Sheets' must be followed.
- the soluble chloride content in the insulation materials used must not exceed 0.05% by weight in accordance with DIN 1988, Part 7.

important: AS-quality insulation materials (see also AGI Q 135) contain significantly less chloride than the maximum permissible content.

fire characteristics

VSH SudoXPress Stainless tubes are considered as non-combustible tubes class A1 according EN 13501-1.

VSH SudoXPress Stainless tube 1.4401 (AISI 316)



VSH SudoXPress Stainless tubes have been tested and approved for potable water installations by many international certifying bodies, for example, they comply with DVGW/DIN and DVGW – Worksheet GW 541.

applications

- all potable water installations in accordance with international potable water institutes, such as the German Potable Water Decree (TrinkwV) and EU Directive 98/83/EC, DIN 50930 - Part 6 and in compliance with EN806 and DIN 1988
- water supply and rainwater installations
- potable water for industrial applications
- for fire fighting and fire protection installations in accordance with DIN 1988-600, SVGW W3
- wet and dry sprinkler installations in accordance with VdS, FG, LPCB, CNBOP, SBSC and FM
- conditioned water, such as decalcinated/softened water, partially and completely desalinated water, distilled water, water with glycol
- compressed air
- shipbuilding
- special installations for combustible gases: natural and liquid gases, in accordance with DVGW - Worksheet G260. Piping for gas or liquid gas, in accordance with DVGW - Worksheet G600, DVGW, DVGW-TRGI 2018 and TRF 2021

.

technical characteristics	
material	X5CrNiMo 17 12 2 material no. 1.4401 in accordance with DIN-EN 10088
specifications	EN 10312 – DVGW work sheet GW541 (2004) table 2
approvals	DVGW, SVGW, ETA, ÖVGW, SINTEF, STF, KIWA, PZH, SITAC, QB, WRAS, VdS, FM, FG, CNBOP, SBSC, SETS-CO, LPCB, DNV-GL, RINA, BV, LR, SPF
type of tubing	TIG or laser welded
welding seam	100% EDDY CURRENT in accordance with EN 10893-2:2011
weld slag removal	outside
tolerances	in accordance with EN 10312 - table 2
surface colour	matt silver
marking	SudoXPress stainless DN [dimension x wall thickness] Edelstahl/Stainless Steel/Sanitary–GAS 1.4401/AISI316 EN 10312 DVGW GW541 Reg.no. [DVGW registration number] SVGW ÖVGW W1.397 WRAS VA1.22/20294 VA1.12/18769 SINTEF PZH SITAC 0168/04 ATEC 14.1/15-2097_V1 QB 235-2097_V1 LPCB VdS G4080037 [operation pressure LPCB/VdS] bar <FM> [operation pressure FM] psi KK NDE ATG 3057 [batch number or production date], [supplier code] [model designation, repeated every 60 cm]
smallest bend radius	3.5 x external tube diameter (max. 28 mm)
delivery	tubes, length 6 m +0/-50 mm, with protective caps (green)
heat expansion coefficient	0.0160 mm/m at ΔT= 1K
max. working pressure	16 bar

DN	outside Ø x s [mm]	inside Ø [mm]	weight [kg/m]	capacity [l/m]
10	12 x 1.0	10	0.271	0.079
12	15 x 1.0	13	0.333	0.133
15	18 x 1.0	16	0.41	0.201
20	22 x 1.2	19.6	0.624	0.302
25	28 x 1.2	25.6	0.79	0.515
32	35 x 1.5	32	1.24	0.804
40	42 x 1.5	39	1.503	1.195
50	54 x 1.5	51	1.972	2.043
65	76.1 x 2.0	72.1	3.55	4.548
80	88.9 x 2.0	84.9	4.15	5.661
100	108 x 2.0	104	5.05	8.495

dimensions, weight and capacity VSH SudoXPress Stainless tube 1.4401

VSH SudoXPress Stainless tube 1.4521 (AISI 444)



The 1.4521 VSH SudoXPress Stainless tube has been tested and approved for potable water installations, in accordance with DVGW - Worksheet GW 541, Kiwa, WRAS, ETA, ÖVGW, QB and SVGW.

applications

- all potable water installations in accordance with international potable water institutes, such as the German Potable Water Decree (TrinkwV) and EU Directive 98/83/EC, DIN 50930 - Part 6 and in compliance with EN806 and DIN 1988
- water supply and rainwater installations
- potable water for industrial applications
- for fire fighting and fire protection installations in accordance with DIN 1988-600, SVGW W3
- wet and dry sprinkler installations in accordance with DIN 14462
- conditioned water, such as decalcinated/softened water, partially and completely desalinated water, distilled water, water with glycol
- compressed air

technical characteristics	
material	X2CrMoTi 18 2 material no. 1.4521 in accordance with DIN-EN 10088
specifications	EN 10312 – DVGW work sheet GW541 (2004) table 2
approvals	DVGW, SVGW, ETA, ÖVGW, FM, FG, CNBOP, SBSC, SETSCO, LPCB, DNV-GL, RINA, QB, VdS, WRAS, Kiwa
type of tubing	laser welded
welding seam	100% EDDY CURRENT in accordance with EN 10893-2:2011
weld slag removal	outside
tolerances	in accordance with EN 10312 - table 2
surface colour	matt silver
marking	SudoXPress stainless DN [dimension x wall thickness] Edelstahl/Stainless steel 1.4521/AISI444 EN 10312 DVGW GW541 Reg.no. [DVGW registration number] SVGW ÖVGW W1.397 WRAS VA1.22/20294 VA1.12/18769 VdS G4080037 LPCB [operation pressure VdS/LPCB] bar <FM> [operation pressure FM] psi KK ATEC 14.1/15-2097_V1 QB 235-2097_V1 Tectite 316 ATG 3057 [batch number or production date] [supplier code] [model designation, repeated every 60 cm]
smallest bend radius	3.5 x external tube diameter (max. 28 mm)
delivery	tubes, length 6 m +0/-50 mm, with protective caps (green)
heat expansion coefficient	0.0104 mm/m at ΔT= 1K
max. working pressure	16 bar

DN	outside Ø x s [mm]	inside Ø [mm]	weight [kg/m]	capacity [l/m]
12	15 x 1.0	13	0.333	0.133
15	18 x 1.0	16	0.41	0.201
20	22 x 1.2	19.6	0.624	0.302
25	28 x 1.2	25.6	0.79	0.515
32	35 x 1.5	32	1.24	0.804
40	42 x 1.5	39	1.503	1.195
50	54 x 1.5	51	1.972	2.043

dimensions, weight and capacity VSH SudoXPress Stainlesstube 1.4521

VSH SudoXPress Stainless tube 1.4301 (AISI 304)



The 1.4301 VSH SudoXPress Stainless tube is an alternative for 1.4401 (AISI 316) stainless steel tube, making it a cost-effective alternative for applications where potable water is not being used.

applications

- heating installations in accordance with DIN EN 12828
- closed loop and return system cooling installations
- compressed air installations in accordance with DIN ISO 8573-1
- industrial installations

technical characteristics	
material	X5CrNi18-10 material no. 1.4301 in accordance with DIN-EN 10088
specifications	EN 10217-7
approvals	QB, WRAS
type of tubing	laser welded
welding seam	100% EDDY CURRENT in accordance with EN 10893-2:2011
weld slag removal	outside
tolerances	in accordance with EN 10312
surface colour	matt silver
marking	SudoXPress stainless DN [DN/dimension x wall thickness] Stainless steel/Edelstahl 1.4301/AISI 304 Heating/Compressed air-Heizung/Druckluft ATEC 14.1/20-2297_V1 QB 235-2297_V1 NDE [batch number] [supplier code] [model designation, repeated every 60 cm]
smallest bend radius	3.5 x external tube diameter (max. 28 mm)
delivery	tubes, length 6 m +0/-50 mm, with protective caps (zwart)
heat expansion coefficient	0.0160 mm/m at ΔT= 1K
max. working pressure	16 bar

DN	outside Ø x s [mm]	inside Ø [mm]	weight [kg/m]	capacity[l/m]
12	15 x 1.0	13	0.333	0.133
15	18 x 1.0	16	0.41	0.201
20	22 x 1.2	19.6	0.624	0.302
25	28 x 1.2	25.6	0.79	0.515
32	35 x 1.5	32	1.24	0.804
40	42 x 1.5	39	1.503	1.195
50	54 x 1.5	51	1.972	2.043

dimensions, weight and capacity VSH SudoXPress Stainless tube 1.4301

carbon steel tubes

VSH SudoXPress Carbon tubes are precision tubes, protected against external corrosion by a coating of zinc plating and a passivating chrome layer. The zinc layer is applied thermally, which results in good adhesion between the zinc layer and the tube.

The VSH SudoXPress Carbon tubes for sprinkler applications are made from cold rolled steel, which is galvanized using the Sendzimir process.

insulation

The following must be observed when insulating VSH SudoXPress Carbon piping systems:

- cold water lines should be protected against condensation and overheating in accordance with DIN 1988, Part 200.
- hot water lines must be insulated to prevent heat loss in accordance with the Energy-Conservation Act (EnEG).

fire characteristics

VSH SudoXPress Stainless tubes are considered as non-combustible tubes class A1 according to EN 13501-1.

VSH SudoXPress Carbon tubes with a polypropylene (PP) coating are considered inflammable according, class D – s2, d2, according to EN 13501-1, building materials (thermoplast, limited smoke development, many drips/droplets)

VSH SudoXPress Carbon tube



VSH SudoXPress Carbon tubes are precision tubes manufactured in accordance with EN 10305 (formerly DIN 2394/ NEN 1982) from a special, very low carbon content steel, which results in a very easy to bend tube. The tubes are also leak tested in accordance with EN 10246-1, so that all tubes are guaranteed to be leak-free.

applications

- closed heating installations in accordance with DIN 4751
- closed cooling installations with water/glycol mixture
- compressed air
- solar installations (closed-loop systems)

technical characteristics	
material	unalloyed ULC ('Ultra Light Carbon') carbon steel, RSt 34-2 mat.-no. 1.0034 in accordance with EN 10305-3
specifications	EN 10305-3 (formerly DIN 2394)
approvals	QB, DNV-GL, RINA
type of tubing	HF-welded
welding seam	100% EDDY CURRENT in accordance with EN 10893-2:2011
weld slag removal	outside flat, inside max. rise 0.5 mm
tolerances	in accordance with EN 10305-3
finish	zinc coating of 8-15 µm. The tube welding seam is subsequently galvanized on the outside. The inside of the tube is protected by a thermally applied oil film.
surface colour	silver
marking	SudoXPress galvanized DN [dimension x wall thickness] EN 10305-3 QB 116-2059 ATEC 14/15-2059_V1 ATG 3056_V1 [batch number or production date] [supplier code] [model designation, repeated every 60 cm]
smallest bend radius	3.5 x external tube diameter (max. 28 mm)
delivery	tubes, length 6 m +0/-50 mm, with protective caps (red)
heat expansion coefficient	0.0108 mm/m at ΔT= 1K
max. working pressure	16 bar

DN	outside Ø x s [mm]	inside Ø [mm]	weight [kg/m]	capacity [l/m]
10	12 x 1.2	9.6	0.271	0.045
12	15 x 1.2	12.6	0.42	0.125
15	18 x 1.2	15.6	0.494	0.191
20	22 x 1.5	19	0.761	0.284
25	28 x 1.5	25	0.98	0.491
32	35 x 1.5	32	1.241	0.804
40	42 x 1.5	39	1.542	1.195
50	54 x 1.5	51	1.999	2.043
65	66.7 x 1.5	63.7	2.411	3.187
65	76.1 x 2.0	72.1	3.503	4.083
80	88.9 x 2.0	84.9	4.412	5.661
100	108 x 2.0	104	5.382	8.495

dimensions, weight and capacity VSH SudoXPress Carbon tube

VSH SudoXPress Carbon tube with polypropylene coating



VSH SudoXPress Carbon tubes with a polypropylene coating (marked 'galvanized - polypropylene coated') can be used for the same applications as VSH SudoXPress Carbon tubes. The polypropylene (PP) coating offers protection against outer corrosion, has a smooth surface and offers good resistance to tearing and impact. For safe press fitting connections, it is essential that, prior to any assembly, the PP coating must be removed from the tube using a stripper, up until the insertion depth of the fitting. Only in this way a good press connection can be achieved.

technical characteristics	
material	unalloyed ULC ('Ultra Light Carbon') carbon steel, RSt 34-2 mat.-no. 1.0034 in accordance with EN 10305-3
specifications	EN 10305-3 (formerly DIN 2394)
approvals	QB, DNV-GL, RINA
type of tubing	HF-welded
welding seam	100% EDDY CURRENT in accordance with EN 10893-2:2011
weld slag removal	outside flat, inside max. rise 0.5 mm
tolerances	in accordance with EN 10305-3
finish	zinc coating of 8-15 µm. The tube welding seam is subsequently galvanized on the outside. The inside of the tube is protected by a thermally applied oil film.
surface	white coloured high-heat stabilized polypropylene PP(B2) thickness ±1 mm,
marking	SudoXPress galvanized DN [dimension x wall thickness] polypropylene coated EN 10305-3 QB 116-2059 ATEC 14/15-2059 [batch number or production date] [supplier code] [model designation, repeated every 60 cm]
smallest bend radius	3.5 x external tube diameter (max. 28 mm)
delivery	tubes, length 6 m +0/-50 mm, with protective caps (red)
heat expansion coefficient	0.0108 mm/m at ΔT= 1K
max. working pressure	16 bar
thermal load	120˚C permanent
heat conductivity	0.22 W/mK

DN	outside Ø x s [mm]	outside Ø incl. coating [mm]	weight [kg/m]	capacity [l/m]
12	15 x 1.2	17	0.420	0.125
15	18 x 1.2	20	0.494	0.191
20	22 x 1.5	24	0.761	0.284
25	28 x 1.5	30	0.980	0.491
32	35 x 1.5	37	1.241	0.804
40	42 x 1.5	44	1.542	1.195
50	54 x 1.5	56	1.999	2.043

dimensions, weight and capacity VSH SudoXPress Carbon tube with PP-coating

VSH SudoXPress Carbon tubes with PP-coating are not to be confused with 'white liaan' tube, which is used in the Netherlands. These are welded, thin-walled steel precision tubes manufactured in accordance with EN 10305-3 from St 34-2 and finished with white paint, suitable to be used in installations with dimensions 15 x 1.5 and 22 x 1.5 where fittings are pressed without removing the paint.

VSH XPress Carbon sprinkler tube



The VSH XPress Carbon sprinkler tubes for wet sprinkler systems are precision tubes made from cold rolled steel and galvanized using the Sendzimir process. In this process, the metal strip is simultaneously coated on both sides in a zinc bath. The tube is protected on both the inside and outside with a zinc layer of a thickness of 15-27 µm (275 g/m^2). After welding, the welding seam is then zinc-plated. The Sendzimir process guarantees good adhesion of the zinc layer and high resistance to corrosion.

applications

- wet fixed sprinkler installations in accordance with DIN 1988, Part 6, VdS, LPCB, SBSC, and CNBOP.
- compressed air.
- shipbuilding.

technical characteristics	
material	non-alloyed ULC ('Ultra Light Carbon') carbon steel, E190 mat. no. 1.0031 in accordance with EN 10305-3
specifications	EN 10305-3 (formerly DIN 2394)
approvals	VdS, LPCB, CNBOP, SETSCO, SBSC, DNV-GL, LR, RINA, UL, ULc
type of tubing	HF-welded
welding seam	100% EDDY CURRENT in accordance with EN 10893-2:2011
weld slag removal	outside flat, inside max. raise 0.5 mm, >54 mm 0.8 mm
tolerances	in accordance with EN10305-3
finish	zinc coating of 15-27µm (275g/m^2). The tube welding seam is subsequently galvanized on the outside.
surface colour	matt silver
marking	XPress Sprinkler galvanized DN [dimension x wall thickness LPCB VdS G408 0007 [operational pressure VdS/LPCB] bar psi [value CRR UL] CRR cUL [value CRR cUL] NDE [batch number or production date] [supplier code] [model designation, repeated every 60 cm]
smallest bend radius	3.5 x external diameter of the tube (max. 28 mm)
delivery	tubes, length 6 m +0/-50 mm, with protective caps (Lilac)
heat expansion coefficient	0.0108 mm/m at ΔT= 1K
max. working pressure	16 bar

DN	outside Ø x s [mm]	inside Ø [mm]	weight [kg/m]	capacity [l/m]
20	22 x 1.5	19	0.761	0.284
25	28 x 1.5	25	0.98	0.491
32	35 x 1.5	32	1.241	0.804
40	42 x 1.5	39	1.542	1.195
50	54 x 1.5	51	1.999	2.043
65	76.1 x 2.0	72.1	3.503	4.083
80	88.9 x 2.0	84.9	4.412	5.661
100	108 x 2.0	104	5.382	8.495

dimensions, weight and capacity VSH XPress Carbon sprinkler tube

copper tubes

Copper tubes that may be used for the VSH XPress Copper system for water applications must comply with the EN 1057 (R220/R250/R290) standard and DVGW-work sheet GW392. Copper tubes used in a VSH XPress system for gas applications must comply with the EN 1057 (R250/R290) and DVGW-work sheet GW392. EN 1057 is the standard for seamless copper and copper alloyed tubes for potable water, gas and heating installations.



flammability

Uninsulated copper tubes are considered as non-combustible tubes class A1 according EN 13501-1.

insulation

Hot water piping systems must be insulated to prevent heat loss in accordance with the Energy-Conservation Act (EnEG).

For regulations regarding heating installations, please see the manufacturer's guidelines. In order to avoid any corrosion on the outside, please ensure that insulating materials do not contain any traces of ammonia or nitrates. In order to minimize the risk of corrosion on the outside of the tube, insulation materials should, as far as possible, be used in conjunction with a moisture barrier. Possible solutions include the use of materials, such as Densopaste or a synthetic layer, between the outside of the copper tube and the insulation material. For installations in the Netherlands, the 'Waterwerkbladen' must be followed.

applications

- all potable water installations in accordance with the German Potable Water Decree (TrinkwV) and EU Directive 98/83/EC, DIN 50930, Part 6 and in compliance with DIN 1988.
- cold and hot water installations.
- heating installations.
- district heating installations.
- solar installations.
- compressed air.
- cooling water/industrial water installations.
- industrial rainwater installations.
- gas installations*.
- heating oil EL (extra light) installations*.
- shipbuilding.

technical characteristics for approved copper tubes

material	DHP copper material no. CW 024A in accordance with DIN EN 1412
outside Ø tolerance	EN 1057
tensile strength	R220 - soft - 220 N/mm² R250 - medium-hard - 250 N/mm² R290 - hard - 290 N/mm²
smallest bend radius	3.5 x external diameter of the tube (down to -10°C)

released wall thickness per outside diameter

outside Ø [mm]	copper tubes in accordance with EN 1057		
	R220	R250	R290
12		0.7-1.0	0.7-1.0
15	1.0	1.0	1.0
18	1.0	1.0	1.0
22	1.0-1.1	0.9-1.2	0.9-1.2
28		0.9-1.2	0.9-1.5
35			0.9-1.5
42		1.2	1.2-1.5
54		1.2	1.2-2.0
64			2.0
66.7		1.2	1.2-2.0
76.1			2.0
88.9			2.0
108		1.5	1.5-2.5

* Requires alternative fittings (gas) or o-rings (fuel oil).

press tools



Press tools consist of a press machine and corresponding press jaws or slings. The press machine can either be powered by battery or by mains. The correct sized jaws and slings must be used for each tube diameter used in the system in order to achieve a perfect connection.

All VSH XPress fittings with diameter from 12 to 108 mm can be pressed using the appropriate press tools listed in our product range. Please use the M-profile jaws or slings that correspond to the diameter to be installed. A special adapter may also be required for diameters of 35 to 108 mm, in addition to the press slings.

Note: VSH XPress fittings for sprinkler applications may only be pressed with press jaws and slings stated in the certificate or found in our tool selector on our website: www.aalberts-ips.eu/presstool.

The illustrations show a cross-section of the press profile before and after pressing.

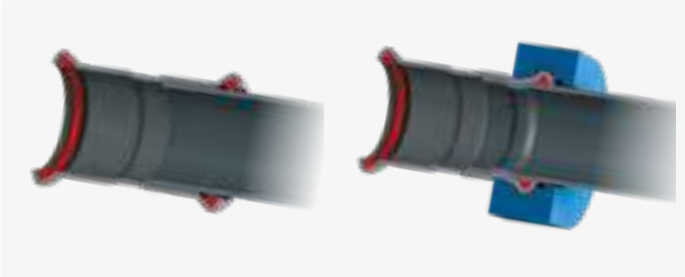

before pressing *after pressing*

approved press tools

All approved press tools to fit the right product are found in our online tool selector, available on our website: www.aalberts-ips.eu/tool-selector

maintenance and correct usage

Correct pressing is guaranteed when the press tools are used correctly. Regular maintenance and lubrication of the press jaws, slings and tools are necessary. Please take notice of the manufacturer‘s instructions for usage and maintenance.

When installing VSH XPress Copper and VSH XPress Copper Gas fittings larger than 35 mm, it is essential that the grooves in the press jaws and slings are lubricated with MoS_2 lubricant! For sizes 42 to 76.1 mm, jaws and slings should be lubricated after every 50 joints, size 88.9 mm every 10 joints and after every 5 joints for size 108 mm.

Note: care must be taken to avoid any contact between lubricant and o-rings. Badly maintained and/or damaged press jaws pose a potential risk. Damaged jaws can damage the fittings, leaving metal particles behind in the jaw as a result. If the same jaw is then used to press a stainless steel fitting, these metal particles will be pressed into the fitting, which could lead to pitting corrosion. Therefore, always make sure that press jaws and slings are properly cleaned when switching between materials.

installation guidelines



1. cut the tube to length

After measuring, the tube can be cut to length using a tube cutter (see picture), a fine-toothed handsaw or a mechanical saw with electrical motor suitable for the tube material. The tube must always be cut completely through. Never partially cut the tube and break it off as this could cause corrosion. Do not use oil-cooled saws, grinding wheels or flame cutters.

VSH SudoXPress Carbon tubes with PP coating and coated copper tubes (Wicu)

To ensure the safe connection of a press fitting, the tube's PP coating must be removed up to the insertion depth using a stripper before assembling the press fitting. With Wicu copper tubes, a support sleeve must be used to maintain the rigidity of the press connection.



2. deburring the tube

The tube ends must be carefully and thoroughly deburred inside and out after being cut to length. This is in order to avoid any damage to the o-ring when inserting the tube into the press fitting. Deburring the inside of tubes prevents pitting and corrosion. A hand deburrer suitable for the material or an electrical tube deburrer may be used for both inside and outside of the tube. Burrs sticking to the tube must be removed.

3. calibration

Always ensure the tube ends are cut off radially and rounded off evenly. The tube ends must be calibrated before pressing, especially in case of copper tubes coated in accordance with DIN EN 1057 R220, e.g. Wicu tubes.



4. marking insertion depth

The required insertion depth (see table page 27) must be marked on the tube or the press fitting (the latter for fittings with tube ends) in order to guarantee a safe and proper joint. VSH XPress Carbon and Stainless Steel 12-54 mm fittings with male end, already have the required insertion depth marked on them, which makes any manual marking unnecessary. Mark the insertion depth using the insertion depth marker for VSH XPress. Reliable pressing with the corresponding tensile strengths can only be achieved if the elements are correctly installed. The pressing operation behind the bead is of crucial importance for the tensile strength. The marking on the tube must remain visible (but as close as possible to the fitting) to identify any movement before or after pressing.



5. check the fitting and tube

Before assembly, the fitting must be checked to ensure that the o-rings are present and correctly positioned. The tube, fitting and o-ring must be examined for any foreign materials (e.g. dirt, burrs), which must be removed, if present.



6. assembly of fitting and tube

Insert the tube carefully into the fitting up to the marked insertion depth, simultaneously rotating and pushing it in the direction of the axis. The insertion depth marking must remain visible. In case of fittings without a stop, the fittings should be inserted at least as far as the marked insertion depth. Rough and careless insertion of the tube into the fitting may result in damage to the o-ring and is therefore not permitted.

If assembly is difficult because of the permitted size tolerances, lubricants like water or soap may be used. Under no circumstances oils, fats or grease may be used as lubricants.

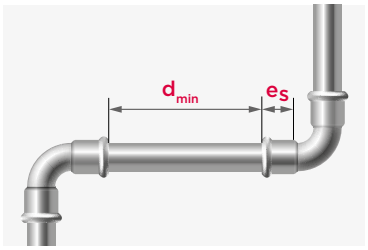

To optimize installation, time may be saved by assembling a number of connections first and then pressing the various connections one by one afterwards. Marking the distance (e_S) provides a check that the tube has not been pushed out of the fitting during pressing. Before starting the final pressing process of the various connections, it is also important to check the minimum required installation distances (see table).

Ø [mm]	insertion depth e_s [mm]			minimum distance d_{min} [mm]	minimum tube length $2x\ e_s + d_{min}$ [mm]		
	VSH XPress Stainless (Gas)	VSH XPress Carbon	VSH XPress Copper (Gas)	VSH XPress Stainless (Gas), Carbon, Copper	VSH XPress Stainless (Gas)	VSH XPress Carbon	VSH XPress Copper (Gas)
12	-	17	17	10	-	44	44
15	20	20	20	10	50	50	50
18	20	20	20	10	50	50	50
22	21	21	21	10	52	52	52
28	23	23	23	10	56	56	56
35	26	26	26	10	62	62	62
42	30	30	30	20	80	80	80
54	35	35	35	20	90	90	90
64	-	-	50	30	-	-	130
66.7	-	50	50	30	-	130	130
76.1	55	55	50	55	165	165	155
88.9	63	63	64	65	191	191	193
108	77	77	64	80	234	234	208

minimum distances between pressings

The table below gives the minimum required installation space so that pressing can be carried out correctly using the appropriate press tools. These distances relate to the general installation configurations that are schematically depicted in figures 1, 2 and 3.

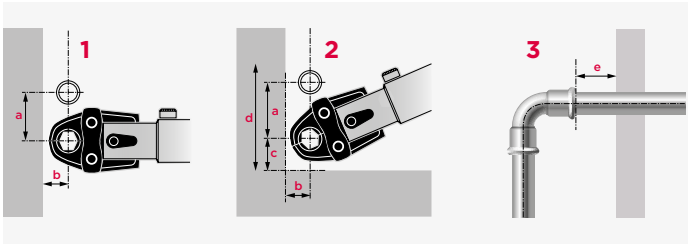

outside [Ø mm]	fig. 1 a	fig. 1 b	fig. 2 a	fig. 2 b	fig. 2 c	fig. 2 d	fig. 3 e (tube depth) [mm]
12-15	56	20	75	25	28	131	40
18	60	20	75	25	28	131	40
22	65	25	80	31	35	150	40
28	75	25	80	31	35	150	60
35	75	30	80	31	44	170	70
42	140/115*	60/75*	140/115*	60/75*	75	265	70
54	140/120*	60/85*	140/120*	60/85*	85	290	70
64	145*	110*	145*	100*	100	345	70
66.7	145*	110*	145*	100*	100	345	70
76.1	140*	110*	165*	115*	115	395	80
88.9	150*	120*	185*	125*	125	435	90
108	170*	140*	200*	135*	135	470	100

minimal needed installation space (slings)*

7. pressing

Before pressing, the press jaws and slings must be checked for dirt, which must be removed if present. Furthermore, the press machine must be in good condition and the manufacturer's instructions for operating the device, maintenance must be observed. Also make sure that the correct press jaws and slings for the application are used. In order to create a correctly pressed connection, the groove of the press tool must enclose the press fitting o-ring bead. Once pressing has started, always complete the press cycle and under no circumstances interrupt the process. All the approved machines, press jaws and slings to fit the right product are available in our online tool selector on our website: www.aalberts-ips.eu/presstool

It is not permitted to press a connection more than once.



pressing gas installations

VSH XPress Stainless Gas and Copper Gas are suitable for gases of the second and third gas family (natural- and liquid gases) in accordance with DVGW Worksheet G 260 and are installed inside buildings (with HTC) and outside buildings (without HTC).

A combination of VSH XPress Stainless Gas and Copper Gas is not permitted for new installations. Connections to gas fittings and gas parts in brass, bronze, ductile grey cast iron and diecast aluminium may be connected with gas thread/press fittings or flanges. If renovations or repairs are being carried out, make sure the tubes are in accordance with the DIN-EN/DVGW standards. Tubes must have perfect, undamaged outer surfaces and must not been painted.

Local regulations must always be observed (e.g. DVGW-TRGI 2018):

1. gas fittings and tubes should be marked yellow to avoid confusion.
2. tubes must be protected during construction against mechanical damage.
3. carry out tests according to G1 Gas Guidelines (e.g. check covered tubes).
4. when laid under screed (above the reinforcement), place in concrete slots.
5. the operating temperature is: -20˚C to +70˚C

bending tubes

It may be necessary to bend a tube in order to carry out the installation. Manual, hydraulic or electrical-operated pipe benders with the corresponding bend formers can be used for this. The tube manufacturer will determine the suitability of the bending tool. VSH XPress Stainless, Carbon steel and Copper tubes may be bent cold, in accordance with DIN EN 1057.
The tube may not be bent when warm due to the danger of corrosion.

The smallest bending radius is as follows:

stainless steel (12 - 22 mm)	r_{min} **= 3.5 x d**
carbon steel (12 - 22 mm)	r_{min} **= 3.5 x d**
copper tubes (12 - 22 mm)	r_{min} **= 3.5 x d**

- a smaller bend radius is not permitted.
- diameters larger than 28 mm (carbon and stainless steel) can be bent by machine.

mixed metal installation

VSH XPress Stainless fittings and tubes can easily be combined with accessories and fittings in stainless steel and non-ferrous metals. However, connections with hot-dip galvanized steel, carbon steel or other non-stainless steel fittings or accessories can give rise to contact corrosion. This can be prevented by using synthetic or non-ferrous metal fittings or spacers that are at least 50 mm long (DIN 1988, Part 7).

We recommend using bronze or brass fittings, such as the VSH XPress gunmetal straight union, for the transition from copper/stainless steel to steel. Combinations must be avoided in the case of gas installations (see paragraph ‘pressing gas installations’ on page 27).

general technical information

thermal expansion

The level of thermal expansion within piping systems depends on the tube material, tube length and temperature deviations. This expansion needs to be taken into account during the installation. Small changes in length can be accommodated by calculating adequate space for expansion as well as through the elastic properties of the piping system itself.
More substantial changes in length need to be offset by other methods like installation of special expansion compensation devices, fixed anchoring points and brackets.

Expansion can also be compensated by the using tube segments or U-bends. The level of expansion to be compensated can be predetermined by calculating the changes in length using the following formula:

$$\Delta l = l \times \alpha \times \Delta T$$

Δl = total thermal expansion [mm]
l = length of the segment in question [m]
ΔT = temperature difference [K]
α = thermal expansion coefficient, where:
for VSH SudoXPress Stainless tube 1.4401
α = 0.0166 mm/mK
for VSH SudoXPress Stainless tube 1.4521/1.4301
α = 0.0104 mm/mK
for VSH SudoXPress Carbon tubes
α = 0.0108 mm/mK
for copper tube
α = 0.0170 mm/mK

The following tables show the expansion of various tubes depending on the length and the rise in temperature.

l [m]	ΔT [K]									
	10	20	30	40	50	60	70	80	90	100
1	0.10	0.21	0.31	0.42	0.52	0.62	0.73	0.83	0.94	1.04
2	0.21	0.42	0.62	0.83	1.04	1.25	1.46	1.66	1.87	2.08
3	0.31	0.62	0.94	1.25	1.56	1.87	2.18	2.50	2.81	3.12
4	0.42	0.83	1.25	1.66	2.08	2.50	2.91	3.33	3.74	4.16
5	0.52	1.04	1.56	2.08	2.60	3.12	3.64	4.16	4.68	5.20
6	0.62	1.25	1.87	2.50	3.12	3.74	4.37	4.99	5.62	6.24
7	0.73	1.46	2.18	2.91	3.64	4.37	5.10	5.82	6.55	7.28
8	0.83	1.66	2.50	3.33	4.16	4.99	5.82	6.66	7.49	8.32
9	0.94	1.87	2.81	3.74	4.68	5.62	6.55	7.49	8.42	9.36
10	1.04	2.08	3.12	4.16	5.20	6.24	7.28	8.32	9.36	10.40
12	1.25	2.50	3.74	4.99	6.24	7.49	8.74	9.98	11.23	12.48
14	1.46	2.91	4.37	5.82	7.28	8.74	10.19	11.65	13.10	14.56
16	1.66	3.33	4.99	6.66	8.32	9.98	11.65	13.31	14.98	16.64
18	1.87	3.74	5.62	7.49	9.36	11.23	13.10	14.98	16.85	18.72
20	2.08	4.16	6.24	8.32	10.40	12.48	14.56	16.64	18.72	20.80

total thermal expansion Δl [mm] VSH SudoXPress Stainless 1.4521/1.4301

l [m]	ΔT [K]									
	10	20	30	40	50	60	70	80	90	100
1	0.11	0.22	0.32	0.43	0.54	0.65	0.76	0.86	0.97	1.08
2	0.22	0.43	0.65	0.86	1.08	1.30	1.51	1.73	1.94	2.16
3	0.32	0.65	0.97	1.30	1.62	1.94	2.27	2.59	2.92	3.24
4	0.43	0.86	1.30	1.73	2.16	2.59	3.02	3.46	3.89	4.32
5	0.54	1.08	1.62	2.16	2.70	3.24	3.78	4.32	4.86	5.40
6	0.65	1.30	1.94	2.59	3.24	3.89	4.54	5.18	5.83	6.48
7	0.76	1.51	2.27	3.02	3.78	4.54	5.29	6.05	6.80	7.56
8	0.86	1.73	2.59	3.46	4.32	5.18	6.05	6.91	7.78	8.64
9	0.97	1.94	2.92	3.89	4.86	5.83	6.80	7.78	8.75	9.72
10	1.08	2.16	3.24	4.32	5.40	6.48	7.56	8.64	9.72	10.80
12	1.30	2.59	3.89	5.18	6.48	7.78	9.07	10.37	11.66	12.96
14	1.51	3.02	4.54	6.05	7.56	9.07	10.58	12.10	13.61	15.12
16	1.73	3.46	5.18	6.91	8.64	10.37	12.10	13.82	15.55	17.28
18	1.94	3.89	5.83	7.78	9.72	11.66	13.61	15.55	17.50	19.44
20	2.16	4.32	6.48	8.64	10.80	12.96	15.12	17.28	19.44	21.60

total thermal expansion Δl [mm] VSH SudoXPress Carbon

l [m]	ΔT [K]									
	10	20	30	40	50	60	70	80	90	100
1	0.16	0.32	0.48	0.64	0.80	0.96	1.12	1.28	1.44	1.60
2	0.32	0.64	0.96	1.28	1.60	1.92	2.24	2.56	2.88	3.20
3	0.48	0.96	1.44	1.92	2.40	2.88	3.36	3.84	4.32	4.80
4	0.64	1.28	1.92	2.56	3.20	3.84	4.48	5.12	5.76	6.40
5	0.80	1.60	2.40	3.20	4.00	4.80	5.60	6.40	7.20	8.00
6	0.96	1.92	2.88	3.84	4.80	5.76	6.72	7.68	8.64	9.60
7	1.12	2.24	3.36	4.48	5.60	6.72	7.84	8.96	10.08	11.20
8	1.28	2.56	3.84	5.12	6.40	7.68	8.96	10.24	11.52	12.80
9	1.44	2.88	4.32	5.76	7.20	8.64	10.08	11.52	12.96	14.40
10	1.60	3.20	4.80	6.40	8.00	9.60	11.20	12.80	14.40	16.00
12	1.92	3.84	5.76	7.68	9.60	11.52	13.44	15.36	17.28	19.20
14	2.24	4.48	6.72	8.96	11.20	13.44	15.68	17.92	20.16	22.40
16	2.56	5.12	7.68	10.24	12.80	15.36	17.92	20.48	23.04	25.60
18	2.88	5.76	8.64	11.52	14.40	17.28	20.16	23.04	25.92	28.80
20	3.20	6.40	9.60	12.80	16.00	19.20	22.40	25.60	28.80	32.00

total thermal expansion Δl [mm] VSH SudoXPress Stainless 1.4401

l[m]	ΔT[K]									
	10	20	30	40	50	60	70	80	90	100
1	0.17	0.34	0.51	0.68	0.85	1.02	1.19	1.36	1.53	1.70
2	0.34	0.68	1.02	1.36	1.70	2.04	2.38	2.72	3.06	3.40
3	0.51	1.02	1.53	2.04	2.55	3.06	3.57	4.08	4.59	5.10
4	0.68	1.36	2.04	2.72	3.40	4.08	4.76	5.44	6.12	6.80
5	0.85	1.70	2.55	3.40	4.25	5.10	5.95	6.80	7.65	8.50
6	1.02	2.04	3.06	4.08	5.10	6.12	7.14	8.16	9.18	10.20
7	1.19	2.38	3.57	4.76	5.95	7.14	8.33	9.52	10.71	11.90
8	1.36	2.72	4.08	5.44	6.80	8.16	9.52	10.88	12.24	13.60
9	1.53	3.06	4.59	6.12	7.65	9.18	10.71	12.24	13.77	15.30
10	1.70	3.40	5.10	6.80	8.50	10.20	11.90	13.60	15.30	17.00
12	2.04	4.08	6.12	8.16	10.20	12.24	14.28	16.32	18.36	20.40
14	2.38	4.76	7.14	9.52	11.90	14.28	16.66	19.04	21.42	23.80
16	2.72	5.44	8.16	10.88	13.60	16.32	19.04	21.76	24.48	27.20
18	3.06	6.12	9.18	12.24	15.30	18.36	21.42	24.48	27.54	30.60
20	3.40	6.80	10.20	13.60	17.00	20.40	23.80	27.20	30.60	34.00

total thermal expansion Δl [mm] copper

required length of compensators to absorb thermal expansion
If the expansion is greater than the piping system is able to absorb without the tension becoming too high, additional measures must be taken, such as the use of expansion compensators, expansion loops or u-bends.

The length of the expansion joints can be calculated using the following formulas in different situations:

z-configuration

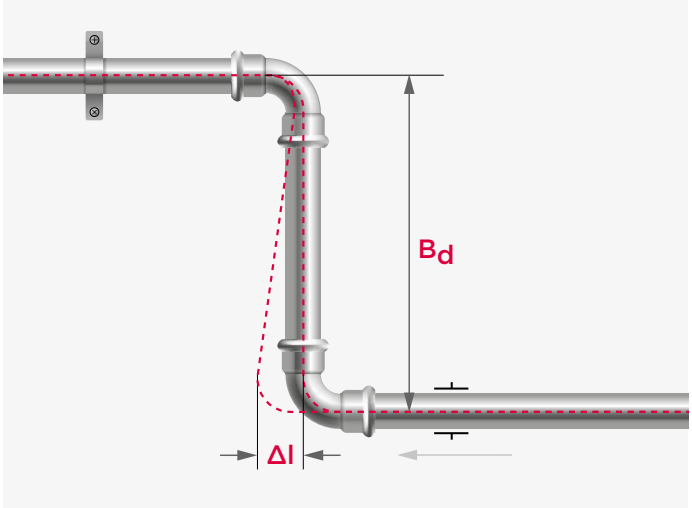

$$B_d = k \times \sqrt{(d \times \Delta l)}$$

B_d = length of the expansion compensator [mm]
k = material constant
= 45 for stainless and carbon steel tubes
= 35 for copper tubes
d = external diameter of the tube [mm]
ΔI = thermal expansion to compensate [mm]

calculation examples

situation	: see figure above
tube material	: stainless 1.4401
tube diameter (d)	: 22 mm
tube length (l)	: 16 m
temperature difference (ΔT)	: 60 °C

Calculation for compensating thermal expansion ΔI

$$\Delta l = 16 \times 0.0166 \times 60 = 15.936 \text{ mm}$$

Calculation of the length of the expansion compensator B_d

$$B_d = 45 \times \sqrt{(22 \times 15.936)} = 843 \text{ mm}$$

t-configuration

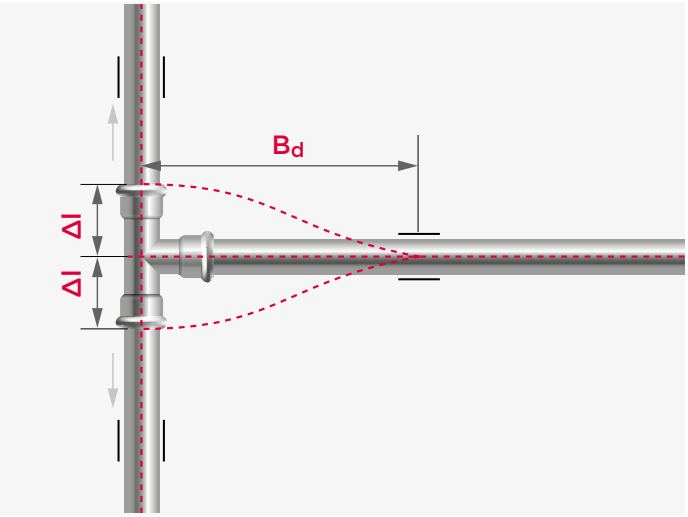

$$B_d = 1.44 \times k \times \sqrt{(d \times \Delta l)}$$

B_d = length of the expansion compensator [mm]
k = material constant
= 45 for stainless and carbon steel tubes
= 35 for copper tubes
d = external diameter of the tube [mm]
ΔI = thermal expansion to compensate [mm]

calculation examples

situation	: see figure above
tube material	: stainless 1.4401
tube diameter (d)	: 22 mm
tube length (l)	: 16 m
temperature difference (ΔT)	: 60° C

Calculation for compensating thermal expansion ΔI

$$\Delta l = 16 \times 0.0166 \times 60 = 15.936 \text{ mm}$$

Calculation of the length of the expansion compensator B_d

$$B_d = 1.44 \times 45 \times \sqrt{(22 \times 15.936)} = 1.213 \text{ mm}$$

u-configuration

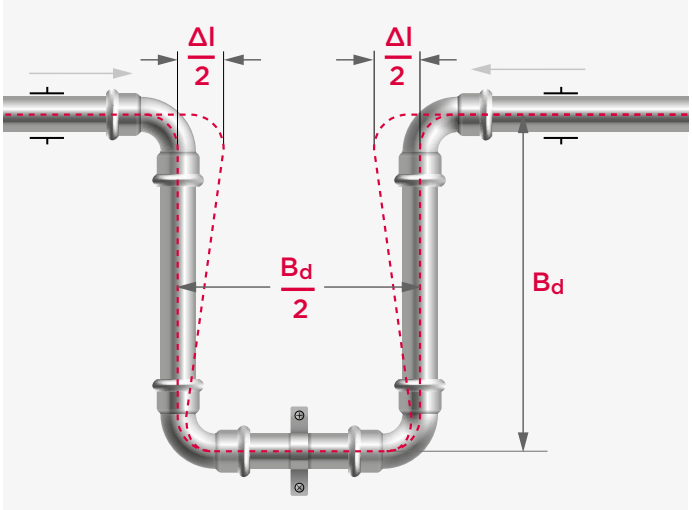

$$B_d = k \times \sqrt{(d \times \Delta l)} / 1.8$$

B_d = length of the expansion compensator [mm]
k = material constant
= 45 for stainless and carbon steel tubes
= 35 for copper tubes
d = external diameter of the tube [mm]
ΔI = thermal expansion to compensate [mm]

calculation examples

situation	: see figure above
tube material	: stainless 1.4401
tube diameter (d)	: 22 mm
tube length (l)	: 16 m
temperature difference (ΔT)	: 60°C

Calculation for compensating thermal expansion ΔI

$$\Delta l = 16 \times 0.0166 \times 60 = 15.936 \text{ mm}$$

Calculation of the length of the expansion compensator B_d

$$B_d = 45 \times \sqrt{(22 \times 15.936)} / 1.8 = 468 \text{ mm}$$

For stainless steel and carbon steel, the required length of the compensator B_d can be read directly from the following graphs depending on the thermal expansion ΔI to be compensated. Axial compensators will be necessary if this length exceeds that of the available space.



axial compensators R2747 and R2756

graph 1: to determine the length B_d of carbon and stainless steel tube shown in the z-configuration (page 30).

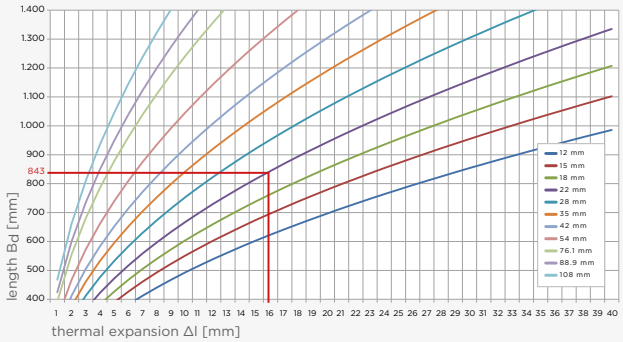

Note: in the figure shown in the t-configuration (page 30), multiply the B_d value from figure 1 by factor 1.44.

graph 2: to determine the B_d length of carbon steel and stainless steel tube shown in the u-configuration (page 31).

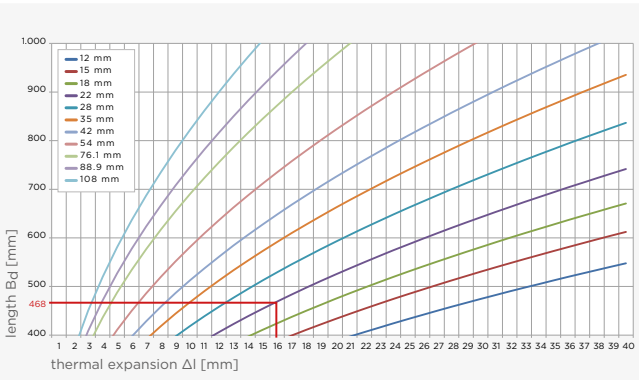

fixed points and sliding points

Piping systems must have fixed points and sliding points to ensure that pipe sections move in the correct direction, so that thermal expansion is absorbed by the sections provided for this purpose. i.e. the compensators. The following rules must be respected in this regard:

- never place fixed points on or right next to pipe connections.
- sliding points can only allow pipe movements in the intended direction and cannot obstruct them
- if an axial compensator is used in a section, always place a fixed point at both ends capable of absorbing all the forces acting on it
- preferably use rubber-lined stirrups to reduce noise and vibration and to optimize distribution of tension

pressure loss

Every fluid that flows through a piping system experiences continuous and local flow resistances, the so-called pressure drops. There is a difference between the continuous and the local pressure drop. A continuous pressure drop is mainly caused by the flow resistance in straight tube sections, which essentially is a result of the friction between the fluid and the tube wall. Local pressure drops, on the contrary, are those flow resistances that are created by, for instance, a change in the internal tube diameter, a tube branch, an elbow, etc.

continuous pressure drop

To calculate the resistance of a fluid flow in a straight section of a piping system, first determine the resistance in a unit of length and then multiply the total length by this value. This value can be determined analytically using the Hazen-Williams formula.

$$p = \frac{6.05 \times 10^5}{C^{1.85} \times di^{4.87}} \times Q^{1.85}$$

p = pressure loss in the tube [bar/m]
Q = flow through the tube [l/min]
di = mean internal diameter of the tube [mm]
C = constant for type and condition of the tube
= 140 for VSH XPress stainless and carbon steel

If there is the need to perform these calculations, please consult the relevant specialized literature. For the normal installation calculations, the appropriate values as given in the diagram below can be used. The pressure drop value R and the flow velocity [m/s] for a given water flow rate can be determined simply and quickly in this way.

Once R and the actual or equivalent length of the piping system are known, the total pressure drop over the particular segment can be calculated. The diagram shows the values that apply to water with a temperature of 80°C. It can be seen that R changes with temperature, so a correction is needed. Graphs can be prepared for the different operating temperatures and various velocity ranges.

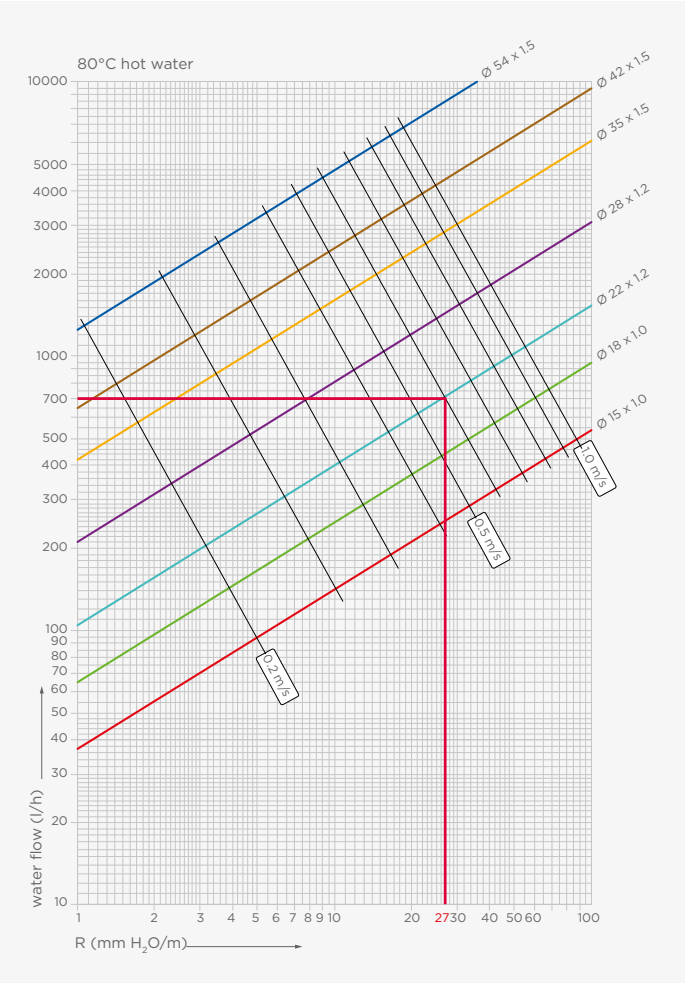

pressure drop on hot water with a temperature of 80°C

In addition to temperature, water additives, e.g. anti-freeze, will affect the value R and needs to be corrected accordingly. It would be too complex to use several diagrams to perform a calculation for each temperature. That is why the following diagram can be used. It gives the correction factor K_c that needs to be applied to R for the actual temperature of the fluids.

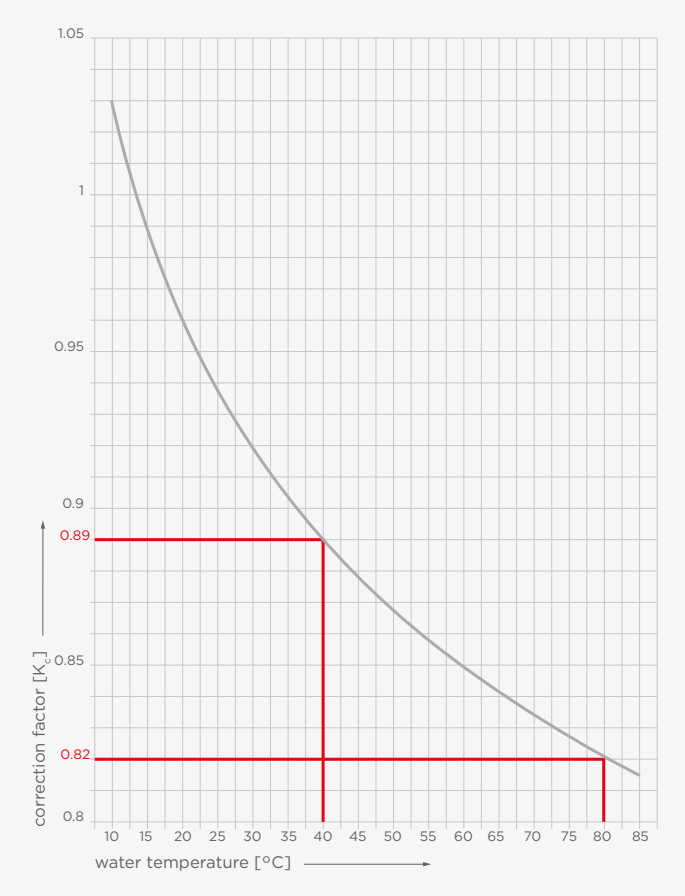

correction factor for different water temperature K_c

The following example explains the use of the diagram. If we assume a flow rate of 700 l/h for a tube of 22 x 1.2 mm, the value of R is 27 mm H_2O/m (± 270 Pa/m) for a temperature of 80°C. Imagine that we want to calculate the value of R for a water temperature of 40°C. We must first find the value of [R] for this temperature and then multiply that value by the correction factor K_c for a temperature of 40°C.

$$R = (27/0.82) \times 0.89 = 29.3 \text{ mm } H_2O/m\ 293\ [Pa/m]$$

local pressure drops

A local pressure drop is, as mentioned at the start of this section, the resistance to flow that results from changes in the flow direction and cross-sectional area, flow splitting over several channels, etc. In general, there are two ways of calculating such flow resistances: the direct analytical method and the method that uses 'equivalent lengths'.

equivalent length method

This method assumes that the pressure drop at a particular point can be considered to be the same as an equivalent increase in the length of a straight piping system with the same internal diameter. The final result is a pressure drop that is equal to the real pressure drop. In other words, the actual length of the piping system is added to all the equivalent lengths of the individual joints. The actual length is then multiplied by the pressure drop per unit-length R in order to be able to calculate the total pressure drop of the system. This method is not as accurate as the direct method but has the advantage that the calculation can be carried out more quickly.

direct analytical method ζ / equivalent length method [m]

															
Ø	**DN**	**ζ**	**[m]**	**ζ**	**[m]**	**ζ**	**[m]**	**ζ**	**[m]**	**ζ**	**[m]**	**ζ**	**[m]**	**ζ**	**[m]**
12	10	1.29	0.38	0.61	0.18	0.30	0.09	0.90	0.27	0.26	0.08	0.09	0.09	-	-
15	12	1.02	0.49	0.69	0.33	0.40	0.19	1.13	0.55	0.36	0.17	0.52	0.25	0.64	0.31
18	15	0.93	0.58	0.77	0.48	0.50	0.32	1.41	0.89	0.46	0.29	1.06	0.67	0.96	0.60
22	20	0.44	0.35	0.38	0.30	0.15	0.12	1.05	0.84	0.11	0.08	0.73	0.59	1.29	1.04
28	25	0.35	0.38	0.28	0.32	0.13	0.28	0.93	1.01	0.05	0.06	0.65	0.72	0.82	0.92
35	32	0.31	0.43	0.29	0.40	0.08	0.11	0.93	1.34	0.03	0.04	0.53	0.79	1.47	2.19
42	40	0.25	0.48	0.22	0.42	0.11	0.20	1.20	2.27	0.06	0.11	0.46	0.85	-	-
54	50	0.30	0.79	0.19	0.49	0.09	0.24	1.15	3.06	0.06	0.14	0.36	1.43	-	-
76.1	65	0.25	1.04	0.15	0.62	0.08	0.31	1.07	4.42	0.04	0.17	0.32	1.68	-	-
88.9	80	0.24	1.22	0.13	0.66	0.07	0.36	1.06	5.38	0.04	0.20	0.27	2.10	-	-
108	100	0.23	1.51	0.12	0.76	0.07	0.43	1.05	6.90	0.03	0.20	-	-	-	-

equivalent lengths and values of local pressure drops

direct analytical method

The local pressure drop can be calculated using the following equation:

$$\Delta p_L = \Sigma\zeta \times v^2 \times \gamma/2 \times 10^{-5}\ [bar]$$

v = flow velocity of the fluid [m/s]
γ = specific density of the fluid [kg/m³]
ζ = local flow resistance coefficient

The table gives the ζ values for each type of fitting. We can assume that ζ is velocity-independent for those velocities that occur in domestic installations or in other normal applications. This is supported by the fact that the change in ζ as a function of the Reynolds number in these velocity ranges is only minimal. Once the ζ value is known, you can read the corresponding local pressure drop off directly.

heat loss

Just as with all other types of tube made from metal or synthetic materials, adequate measures must be taken with VSH SudoXPress tubes to limit heat loss. Please consult the relevant regulations on minimum insulation thickness and insulation standards.

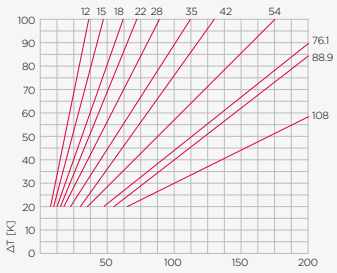

linear heat loss [W/m]
VSH SudoXPress Stainless tube

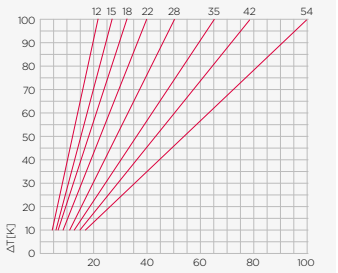

linear heat loss [W/m]
copper tube

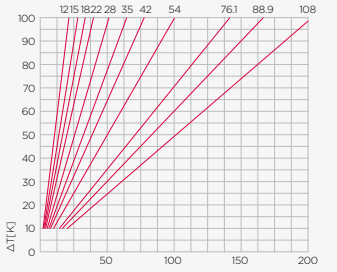

linear heat loss [W/m]
VSH SudoXPress Carbon tube

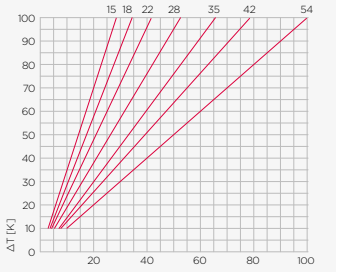

linear heat loss [W/m]
VSH SudoXPress Carbon tube with polypropylene coating

The diagrams show the linear heat losses of the tube according to their diameter and temperature difference. The temperature difference is the difference between the temperature of the liquid inside the piping system and the surrounding air temperature. This applies to uninsulated tubing that is laid against the walls or partitions of the building.

friction loss

In fluid flow, friction loss is the loss of pressure that occurs in piping systems due to the effect of the fluid's viscosity near the surface of the tube. the following tables show the friction loss R in the tube with a flow rate Q and flow velocity at a temperature of 10°C for VSH SudoXPress Stainless tubes in accordance with DVGW - Worksheet GW 541 (2004), Series 2, with a wall roughness k of 0.0015 mm. The tables for VSH SudoXPress Carbon and copper tube, as well as the tables for different situations (other temperatures or applications), are available from Aalberts integrated piping systems or can be downloaded from: www.aalberts-ips.eu.

	12 x 1.0 mm		15 x 1.0 mm		18 x 1.0 mm		22 x 1.2 mm		28 x 1.2 mm	
maximum flow-rate Qs [l/s]	R [mbar/m]	v [m/s]	R [mbar/m]	v [m/s]	R [mbar/m]	v [m/s]	R [mbar/m]	v [m/s]	R [mbar/m]	v [m/s]
0.01	0.5	0.1	0.2	0.1	0.1	-	-	-	-	-
0.02	1.6	0.3	0.5	0.2	0.2	0.1	0.1	0.1	-	-
0.03	3.2	0.4	0.9	0.2	0.4	0.1	0.1	0.1	0.1	-
0.04	5.3	0.5	1.5	0.3	0.6	0.2	0.2	0.1	0.1	0.1
0.05	7.7	0.6	2.2	0.4	0.8	0.2	0.3	0.2	0.1	0.1
0.10	25.4	1.3	7.3	0.8	2.7	0.5	1.0	0.3	0.3	0.2
0.15	51.5	1.9	14.8	1.1	5.5	0.7	1.9	0.5	0.7	0.3
0.20	85.4	2.5	24.5	1.5	9.1	1.0	3.3	0.6	1.1	0.4
0.25	126.6	3.2	36.2	1.9	13.5	1.2	4.8	0.8	1.6	0.5
0.30	175.0	3.8	49.9	2.3	18.5	1.6	6.5	1.0	2.1	0.6
0.35	230.3	4.5	65.8	2.8	24.3	1.7	8.6	1.1	2.8	0.7
0.40	292.2	5.1	83.1	3.0	30.8	2.0	10.8	1.3	3.5	0.8
0.45	360.8	5.7	102.4	3.4	37.9	2.2	13.4	1.4	4.4	0.9
0.50	435.8	6.4	123.8	3.8	45.7	2.5	16.0	1.5	5.3	1.0
0.55			146.5	4.1	54.1	2.7	19.0	1.8	6.2	1.1
0.60			171.1	4.5	63.2	3.0	22.2	1.9	7.3	1.2
0.65			197.5	4.9	72.9	3.2	25.5	2.1	8.3	1.3
0.70			225.5	5.3	83.2	3.5	29.1	2.2	9.5	1.4
0.75					94.1	3.7	33.0	2.4	10.8	1.5
0.80					105.6	4.0	37.0	2.5	12.0	1.6
0.85					117.6	4.2	41.2	2.7	13.5	1.7
0.90					130.3	4.5	45.6	2.9	14.8	1.8
0.95					143.6	4.7	50.3	3.0	15.4	1.9
1.00					157.4	5.0	55.1	3.2	17.9	2.0
1.05							60.1	3.3	19.6	2.1
1.10							65.3	3.5	21.2	2.2
1.15							70.7	3.7	23.0	2.3
1.20							76.3	3.8	24.8	2.4
1.25							82.1	4.0	26.7	2.5
1.30							86.1	4.1	28.6	2.6
1.35							94.2	4.3	30.7	2.8
1.40							100.8	4.5	32.7	2.9
1.45							107.1	4.6	34.8	3.0
1.50							113.9	4.8	37.0	3.1
1.55							120.8	4.9	39.2	3.2
1.60							127.9	5.1	41.5	3.3
1.65									43.8	3.4
1.70									46.3	3.5
1.75									48.7	3.6
1.80									51.2	3.7
1.85									53.8	3.8
1.90									56.5	3.9
1.95									59.3	4.0
2.00									62.0	4.1
2.05									64.8	4.2
2.10									67.6	4.3
2.15									70.5	4.4
2.20									73.5	4.5
2.25									76.5	4.6
2.30									79.6	4.7
2.35									82.8	4.8
2.40									86.0	4.9

friction loss values (VSH SudoXPress Stainless tubes)

maximum flow rate Qs [l/s]	35 x 1.5 mm		42 x 1.5 mm		54 x 1.5 mm	
	R [mbar/m]	v [m/s]	R [mbar/m]	v [m/s]	R [mbar/m]	v [m/s]
0.2	0.3	0.2	0.1	0.2	0.0	0.1
0.4	1.1	0.5	0.4	0.3	0.1	0.2
0.6	2.3	0.7	0.9	0.5	0.3	0.3
0.8	3.8	1.0	1.5	0.7	0.5	0.4
1.0	5.7	1.2	2.2	0.8	0.7	0.5
1.2	7.8	1.5	3.1	1.0	0.9	0.6
1.4	10.3	1.7	4.0	1.2	1.2	0.7
1.6	13.1	2.0	5.1	1.3	1.6	0.8
1.8	16.2	2.2	6.3	1.5	1.9	0.9
2.0	19.5	2.5	7.6	1.7	2.3	1.0
2.2	23.1	2.7	9.0	1.8	2.6	1.1
2.4	27.0	3.0	10.5	2.0	3.1	1.2
2.6	31.2	3.2	12.1	2.2	3.6	1.3
2.8	35.7	3.5	13.8	2.3	4.1	1.4
3.0	40.4	3.7	15.6	2.5	4.6	1.5
3.2	45.3	4.0	17.5	2.7	5.2	1.6
3.4	50.6	4.2	19.5	2.8	5.8	1.7
3.6	56.1	4.5	21.6	3.0	6.5	1.8
3.8	61.8	4.7	23.8	3.2	7.1	1.9
4.0	67.8	5.0	26.2	3.3	7.7	2.0
4.2	74.1	5.2	28.6	3.5	8.4	2.1
4.4			31.0	3.7	9.2	2.2
4.6			33.6	3.9	10.0	2.3
4.8			36.3	4.0	10.8	2.4
5.0			39.1	4.2	11.6	2.5
5.2			42.0	4.4	12.5	2.6
5.4			44.9	4.5	13.3	2.8
5.6			48.0	4.7	14.2	2.9
5.8			51.1	4.9	15.0	3.0
6.0			54.4	5.0	16.1	3.1
6.2					17.1	3.2
6.4					18.0	3.3
6.6					19.1	3.4
6.8					20.2	3.5
7.0					21.3	3.6
7.2					22.3	3.7
7.4					23.5	3.8
7.6					24.7	3.9
7.8					25.9	4.0
8.0					27.0	4.1
8.2					28.3	4.2
9.0					33.5	4.6
10.0					40.6	5.1

friction loss values (VSH SudoXPress Stainless tubes)

maximum flow rate Qs [l/s]	76.1 x 2.0 mm		88.9 x 2.0 mm		108 x 2.0 mm	
	R [mbar/m]	v [m/s]	R [mbar/m]	v [m/s]	R [mbar/m]	v [m/s]
1	0.1	0.2	0.1	0.2	0.0	0.1
2	0.4	0.5	0.2	0.4	0.1	0.2
3	0.8	0.7	0.4	0.5	0.1	0.4
4	1.4	1.0	0.6	0.7	0.2	0.5
5	2.0	1.2	0.9	0.9	0.4	0.6
6	2.8	1.5	1.3	1.1	0.5	0.7
7	3.7	1.7	1.7	1.2	0.6	0.8
8	4.7	2.0	2.2	1.4	0.8	0.9
9	5.9	2.2	2.7	1.6	1.0	1.1
10	7.1	2.5	3.2	1.8	1.2	1.2
11	8.4	2.7	3.8	1.9	1.4	1.3
12	9.9	2.9	4.5	2.1	1.7	1.4
13	11.4	3.2	5.2	2.3	2.0	1.5
14	13.0	3.4	5.9	2.5	2.2	1.7
15	14.8	3.7	6.7	2.7	2.5	1.8
16	16.6	3.9	7.5	2.8	2.8	1.9
17	18.5	4.2	8.4	3.0	3.2	2.0
18	20.6	4.4	9.3	3.2	3.5	2.1
19	22.7	4.7	10.3	3.4	3.9	2.2
20	24.9	4.9	11.3	3.5	4.3	2.4
21	27.2	5.1	12.4	3.7	4.6	2.5
22			13.4	3.9	5.1	2.6
23			14.6	4.1	5.5	2.7
24			15.7	4.2	5.9	2.8
25			17.0	4.4	6.4	3.0
26			18.2	4.6	6.8	3.1
27			19.6	4.8	7.3	3.2
28			20.9	5.0	7.8	3.3
29			22.2	5.1	8.4	3.4
30					8.9	3.5
31					9.5	3.7
32					10.0	3.8
33					10.6	3.9
34					11.1	4.0
35					12.3	4.2
36					12.9	4.3
37					13.6	4.4
38					14.3	4.6
39					15.0	4.7
40					15.7	4.8
41					16.4	4.9
42					17.1	5.0
43					17.9	5.2

friction loss values (VSH SudoXPress Stainless tubes)

built-in

recommendations

For esthetical and practical reasons tubes are rarely installed uncovered in modern installations, other than in spaces such as cellars and garages. Several precautionary measures, depicted schematically in the figures 1, 2 and 3 below, are necessary if tubes are to be built-in/recessed in walls or floors. The following systems can be built-in/recessed:

- VSH XPress Stainless without corrosion protection*, avoid the concrete from getting moist after embedding.
- VSH XPress Carbon with polypropylene coating (fittings must be protected against corrosion)
- VSH XPress Copper with corrosion protection (e.g. coated/protective sleeve).
- VSH XPress Copper Gas with corrosion-protection (e.g. coating/protective sleeve).

Important: tubes for water that are built-in (e.g. walls or floors) must always have a suitable coating/sleeve made from a suitable material in order to ensure that there is no contact between the tube and the building structure (in connection with noise issues).

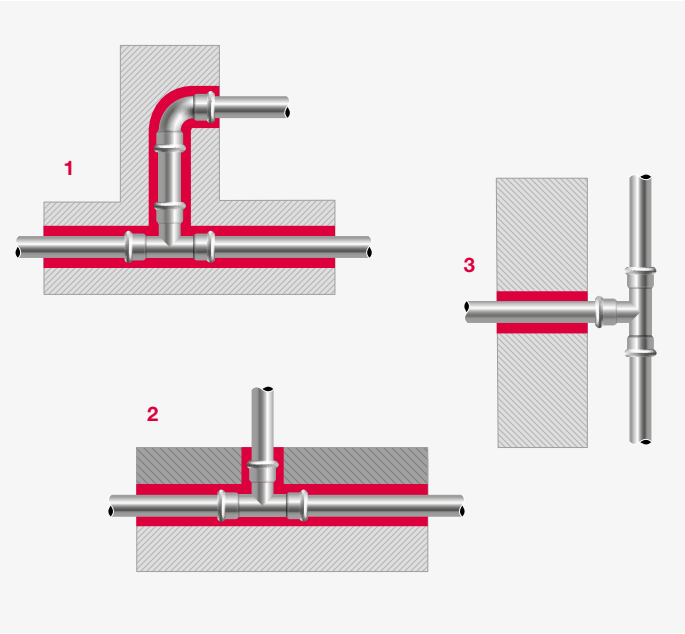

1. wall built-in

The figure shows a cross-section of a tube installed inside a wall. Fittings and tubes have to be wrapped by an elastic and pliable coating that separates the installation completely from the building so that there is no direct contact. Prescribed by DIN1988, insulation materials are a good solution for this purpose and also provide heat insulation.

2. floor built-in

The horizontal stretches of piping systems installed inside floors and sprung floors, must be isolated by a protective sleeve, such as shown in the figure 2. An adequate elastic sleeve must be used where the tube exits the floor so that the tube does not come into contact with the cement, when the tube should expand.

3. riser branch

The figure shows a classical situation of branching from an outside riser. In such a case, make sure the tee-fitting is not subjected to any stresses as a result of a change in direction of the axis of the fitting. Mounting brackets, as fixed points and gliding points are very important in this context. As a general rule, fittings and tubes in all installations, should always be enclosed in a soft material to allow expansion. We emphasize once again that great care must be taken when selecting insulation and surrounding materials for stainless steel piping sytems to ensure that they do not ever allow any chloride ions to come into contact with the piping system. In case of copper, harmful substances from the environment, such as ammonia or nitrates, must be prevented from penetrating the insulating material.

guidelines for distances of mounting brackets

Ø tube diameter [mm]	max. distance [m]
12	1.00
15	1.25
18	1.50
22	2.00
28	2.25
35	2.75
42	3.00
54	3.50
64	4.25
66.7	4.25
76.1	4.25
88.9	4.75
108	5.00

distances between brackets in accordance with DIN1988, part 200

The distance values between the attachment points as shown above is insufficient. Heat expansion also needs to be appropriately compensated in horizontal stretches and, therefore, the distances above may need to be adjusted.

mounting tubes

When securing the tubes, the following must be kept in mind: The load-bearing capacity of the mounting brackets must correspond to the weight of the tubes and also withstand expansion and torsion forces. Mounting brackets, such as fixed mounting points and clips, must therefore be placed and assembled correctly. Attachment points may only be fitted onto straight tube sections. Mounting directly onto fittings is not allowed.

* stainless tubes that are built-in, must be protected against material that contains chlorides.

pressure test

As soon as a piping system is installed, it must be checked for leaks before being covered up and concealed. With potable water and heating installations, the pressure test can be carried out with water, air or inert gases. The tested medium and the results of the test must be documented in a so-called pressure test report.

Important: A pressure test of the piping system must be carried out in all cases. Before being covered up, insulated, painted or walled in, a piping system must first undergo a pressure test in order to be certain that there are no leaks. Pressure tests must always be performed in accordance with local regulations. As a rule of thumb, a pressure of 1.5 times the operating pressure is used for pressure tests with water.

Important: When testing an VSH XPress Carbon installation, make sure that no water remains in the system afterwards, in order to avoid the risk of corrosion, unless the system is going to be put into service shortly afterwards.

Important: When testing water installations, always make sure to use clean, potable water.

pressure test of potable water systems

Important: The pressure test with water in a potable water piping system that has already been installed is performed in accordance with the ZVSHK/BHKS technical bulletins.
The medium used for the pressure test with water must be of potable water quality (free of oil and other impurities) in order to avoid any contamination of the piping system. After being filled with pure, potable water, the piping system must be properly bled.

pressure test with air

Important: Pressure tests with air or inert gases can be carried out in accordance with the ZVSHK/BHKS technical bulletins, ‘Pressure Test with Air or Inert Gases’, (at 100 l tube capacity a leak tightness test at 110 mbar for at least 30 minutes). For every additional 100 l, the time must be increased by 10 minutes. After the leak tightness test, the strength of the connection is to be tested during 10 minutes at a maximum of 3 bar up to DN50, maximum of 1 bar >DN50. For safety reasons, the maximum test pressure is set at 3 bar. This maximum test pressure also applies for gas piping systems.

pressure test for heating and cooling systems

Important: As a rule, the pressure test for piping systems that have already been installed are carried out with water in accordance with DIN-VOB 18380.

- the test pressure at each point of the system must be 1.3 times the operating pressure and at least 1 bar overpressure
- immediately after the cold water pressure test, the water must be heated up to the highest hot water temperature on which the calculations were based in order to be certain that the system remains tight at high temperatures
- during the test no pressure drops should occur
- the pressure test must be adequately documented

pressure test for natural gas systems

Important: The pressure test for natural gas and liquid gas systems must be performed in accordance with local regulations.

pressure test of sprinkler systems

The tubes of a sprinkler piping system must undergo a pressure test in accordance with valid guidelines, such as CEA 4001, no. 17.1.1. (VdS) for at least two hours. A pressure corresponding to 1.5 times (measured at the alarm valves) the permitted positive operating pressure – but of at least 15 bar – must be maintained during the test. This pressure test is a check of both the strength and tightness of the system. The system must be monitored for 24 hours for any pressure drop due, for example, temperature changes. Dry sprinkler systems must also be tested pneumatically to a pressure not less than 2.5 bar for at least 24 hours. Any leakage, which occurs and results in a pressure drop of more than 0.15 bar over the 24 hours, must be corrected. Any faults identified, such as permanent deformations, ruptures or leakages must be corrected, and the pressure test must be repeated.

flushing the piping system

Each piping system must be flushed thoroughly before being put into use so that any dirt and other matter is removed from the inside of the tube surface so that hygiene problems and corrosion damage are largely prevented.

Potable water systems must be flushed as soon as possible after installing the tubes and after the pressure test. The cold and hot water tubes should be flushed separately, intermittently and under pressure with an air-water mixture (EN 806, Part 4). Installation regulations, such as the Potable Water Act and worksheets, must be followed. In exceptional cases, it may be necessary to flush the system with a disinfecting substance. When flushing with water containing a disinfectant addition, special care must be taken to ensure that no chlorides remain in the piping system. Always make sure to flush with clean, potable water.

corrosion

There are different kinds of corrosion: chemical corrosion, electro-chemical corrosion, internal and external local corrosion, stray current corrosion, etc. All these kinds of corrosion have very particular chemical or mechanical causes. The following paragraphs provide some simple hints on how to avoid such problems.

electro-chemical corrosion

Electro-chemical corrosion occurs under the following circumstances:

- an electrochemical potential difference between both parts
- the presence of a conductive fluid (electrolyte), such as water
- the presence of oxygen (O_2)

A distinction must be made between heating installations and water supply installations. When properly installed and operated, there will be no significant amounts of oxygen in heating installations and therefore very little corrosion. In potable water installations however, oxygen content is very high, nearly reaching the saturation point.

It is of primary importance that VSH XPress System components are installed only downstream of other, metallurgically inferior (less noble) components, that are possibly present in these kinds of installations. For example, it is possible to install branches with VSH XPress Stainless tubes from a piping system consisting of carbon steel tubes. In such cases, non-ferrous metal or synthetic connection pieces must be used (see DIN1988).

Another important factor is the ratio between the surface of the noble metal and that of the less noble metal. The higher this ratio, the greater the corrosion rate may be. Therefore, recommended that you avoid using carbon steel extensions and connection pieces and use stainless steel or brass fittings instead .

stray currents corrosion

Corrosion by stray currents rarely occurs in practice and is immediately recognisable as pitting occurs on the outside of the tube. Stray current corrosion requires a direct current that turns the metal into an anode. The current which, in practice and despite insulation measures, penetrates into earth and from there into other neighbouring metal structures, such as a water supply installation, runs through a particular stretch of the system before it returns to earth again. In order to penetrate into the piping system, earth current must have an entry point at a spot where the normal protective tube cover or connection is damaged or missing.

For this reason, metal piping systems must be earthed (see EU Regulations). Direct current installations are generally not used in domestic housing and no serious problems occur with alternating current. Research has shown that problems with stray currents rarely occur and do not depend on the type of metal.

stainless steel

internal corrosion

VSH XPress stainless fittings and tubes are completely passive when in contact with potable water and therefore not at risk from corrosion. Potable water is considered to be water with properties that comply with current regulations on physical-chemical tolerances.
The fittings and tubes also react in a safe and problem free manner as regards a water chlorine content, if 1.34 mg/l is added for disinfection purposes. The VSH XPress stainless system can also be used for all water treatment plants for domestic purposes (e.g. for water softeners).
It is corrosion-resistant as regards demineralized and distilled water and water containing glycol. Hygiene problems regarding heavy metal contamination do not occur with stainless steel. Pitting or stress corrosion can only occur if the maximum values for the water chloride content, as defined in the applicable regulations, are significantly exceeded.

external corrosion

External corrosion of the VSH XPress Stainless components can only occur when wet potable water tubes come into contact with mortar, droplets or covering materials that contain or cause chlorides to be created. Ensure that the outer insulating layer of the fittings and tubes is continuous and that, if necessary, sufficient corrosion-protective insulation tape is applied. Correctly applied closed-cell insulation is an effective protection against corrosion.

carbon steel

internal corrosion

Internal corrosion cannot occur with closed-loop water heating systems. The oxygen in the water in closed-loop systems creates a layer of iron oxide on the inside of the tube thereby preventing any further corrosion. When the heating system is not in use, it must be kept filled at all times or, alternatively, be completely drained and subsequently dried out, to avoid the presence of water and oxygen in the system at the same time.

The necessary additives should be added to prevent frost damage, calcification or corrosion. We are always happy to answer enquiries about the use of additives. Please observe the applicable legislation, regulations and local rules regarding corrosion.

external corrosion

Carbon steel systems are generally installed in such a way that the outer surfaces do not come into contact with corrosive media. VSH XPress Carbon tubes must, however, not be permanently exposed to moisture. VSH XPress Carbon tubes with PP coating offer good protection against corrosion.

prevention of corrosion

Instructions will be found in the following paragraphs on how to prevent corrosion problems in the most common places.
A distinction is made between inner and outer corrosion and the application area. We shall also examine the various application possibilities of various materials that can be combined in an installation (combi-installations).

internal corrosion

heating installations

The penetration of oxygen in closed-loop heating installations will be prevented if high-quality accessories and compensators with closed membranes are used. When filling the installation, the small quantity of oxygen contained in the water is directly absorbed into the inner tube surface, in the process of which a thin layer of iron oxide is formed and after which there is no longer any possibility of corrosion. The loss in wall thickness can be disregarded and the piping system is practically oxygen-free after this reaction.

stainless steel

Stainless steel fittings and tubes are suitable for all open and closed-loop heating installations.
Combi-installations: stainless steel can be used in combi-installations with other materials in any sequence.

carbon steel

Internal corrosion is normally impossible in closed-loop heating installations with VSH XPress Carbon fittings and tubes as oxygen from outside cannot penetrate the installation.
Combi-installations: unalloyed carbon steel can be used without any problems and can be combined with other metals in any sequence in closed-loop systems.

copper

Copper is suitable for all open and closed-loop heating systems.
Combi-installations: copper can be used with other metals in any sequence in combi-installations.

other possible combinations

Galvanized steel – copper – stainless steel.
Combi-installations: these materials can be combined in all closed-loop systems.

water additives

Oxygen scavengers and corrosion inhibitors can be added to the heating-circuit water as a preventive measure against inadmissible oxygen absorption. Observe the supplier's instructions for use.

(potable) water installations

stainless steel

VSH XPress Stainless fittings and tubes have the advantage of being passive in potable water. The physical and chemical properties of potable water are not affected by stainless steel. In this passive state, no internal corrosion will occur. The danger of heavy metal contamination and growth of bacteria is avoided by using stainless steel fittings and tubes.
Pitting or stress corrosion can only occur if the chloride content of the water is significantly higher than the maximum level allowed under current regulations. VSH XPress Stainless components are suitable for all water treatment methods (water softening) for potable water and are also corrosion-resistant regarding demineralized and distilled water and water containing glycol.
VSH XPress Stainless fittings and tubes are, however, not suitable for operation in dosing systems for e.g. disinfectants, which are added to the potable water. VSH XPress Stainless fittings and tubes are also suitable for all other open and closed-loop water systems (e.g. cooling water).
Combi-installations: the corrosion behaviour of stainless steel is not influenced by its use in combi-installations independent of the direction of the flow of water (no flow rule). Stainless steel can be used in any sequence in combi-installations.
Discolouration from a deposit of foreign corrosion products does not indicate corrosion on stainless steel.
Stainless steel can be used with all copper alloys (bronze, copper or brass) in a combi-installation. There is no risk of contact corrosion with stainless steel.

carbon steel

Carbon steel fittings and tubes are not permitted in potable water installations. Contact corrosion will occur with carbon steel if it enters into direct contact with stainless steel.
the possibility of contact corrosion is negligibly small when bronze, copper or brass fittings are used between the carbon steel tube and the stainless steel.

copper

The physical and chemical properties of potable water can be affected by copper in the event of inner corrosion. An unfavourable potable water composition can also lead to corrosion.

The limit values for the use of copper material, with respect to the salt content of the potable water, must therefore correspond to the legal requirements for potable water. If these limit values are adhered to and the potable water composition does not deteriorate, copper is suitable for potable water installations. Combi-installations with copper and carbon steel: the following rule is important, if copper and carbon steel tubes are used in water systems, including open water systems, because of the various properties of the metals:

Flow from base metal to noble metal	
base	carbon steel
↓	copper
noble	stainless steel

Copper must always be used downstream of fittings or tubes of carbon steel.

external corrosion

There are few situations in which outer corrosion occurs in buildings. It is, however, possible in many cases that installations are exposed for a longer period to undesired penetration of rain, humidity or dampness and this can lead to problems. Responsibility for taking relevant measures rests, however, with the user and the installer. Only suitable corrosion protection can offer permanent certainty against corrosion. One way of doing so is to use 'closed cell' insulation, which must be applied in a guaranteed waterproof condition.
Suitable primers - or metallic paints may offer minimal corrosion protection. It is advisable to always use corrosion protection on the tubing in situations where corrosion is likely to occur (damp room, crawl spaces, etc.).

stainless steel
Outer corrosion can only occur in the following circumstances:
- if stainless steel heat-conducting piping systems (50°C) comes into contact with building and insulating materials containing chlorides (as the result of humidity);
- if water vapour on stainless steel heat-conducting piping systems leads to a local chloride concentration; and
- if stainless steel piping systems (including cold water) comes into contact with chlorine gas, saltwater or brine or (oxygen-saturated) water with a high chlorine content.

If there is the danger of building materials coming into contact over a long period with highly chlorinated water, suitable corrosion protection must be used. VSH XPress Stainless tubes in cement floors will not be subject to electrolytic outer corrosion in connection with potential equalisation.

carbon steel
Special attention must be paid to preventing outer corrosion where an environment remains humid for longer periods. Only in case of sporadic short-term exposure to humidity, carbon steel will be resistant against corrosion for a longer period. VSH XPress Carbon connections must be protected in case of increased risk of corrosion due to electrolytic outer corrosion (or longer periods of humidity). A polypropylene coating offers carbon steel tubes effective corrosion protection.

copper
the high resistance of copper to corrosion renders corrosion-protection measures superfluous. Copper tubes in cement floors will not be subject to outer electrolytic corrosion in connection with potential equalisation. However, copper tubing must sometimes also be protected from the impact of outer corrosion, such as sulphites, nitrites and ammonia. Gas tubes must be protected against corrosion in accordance with local guidelines, such as, e.g. NEN 1078-NPR 3378-10.

impact of application and processing

Corrosion may occur due to incorrectly designed installations and faulty applications. The following points must be observed:

cutting stainless steel
Cutting through stainless steel tubes with a grinding tool is not allowed due to the amount of heat developed.

bending stainless steel tubes
Stainless steel tubes may not be bent warm. The heating of the stainless steel tubes alters the structure of the material (sensitisation) and inter-crystalline corrosion can take place.

heat transfer (e.g. with a heating band)
Heat transfer from outside inwards must be prevented as this can lead to the build-up of film on the inside of the tube wall. This film can cause an increase in the concentration of chloride ions, which cause pitting in critical concentrations.

connections
Welding of stainless steel tubes may cause pitting or ring corrosion. In the case of TIG welding of stainless steel, discolouration occurs at the welding joints, which may lead to corrosion on contact with salt water. This discolouration, mainly on the inside of the tube, can only be removed by staining, which is not practical with tubing that has already been installed.

stainless steel – carbon steel – copper
With all three materials (stainless steel, carbon steel, copper), waterline corrosion can occur as a result of interaction between three actors (water – metal – gas (air). This corrosion can be prevented if the piping system remains permanently filled, once filled for the first time. Partial filling will take place for example, if the tubes are emptied again after a pressure test with water, in which case a pressure test using gas/air is to be recommended.

effect of insulation

Insulation does not, as a rule, offer any protection against corrosion, except in the case of 'closed cell insulation' (sealed watertight), which offers effective protection against corrosion. The installation instructions of the supplier of the insulation material must always be followed carefully. Remove dust, dirt, oil or water from the tubing prior to insulating.

The different sections of the insulation material must be carefully joined, taking care that no moisture or water can enter the material. Also take care that the water barrier of the insulation material is not damaged during installation, as moisture could otherwise penetrate under the insulation material.

stainless steel
Insulating materials that release chloride ions in water or which could cause a local increase in chloride ions are not permitted. The weight ratio of water-solution chloride ions in the thermal insulation of the tubes may not exceed 0.05% (AS quality).

carbon steel
No corrosion can occur as long there's no humidity between the insulation material and the tube. If there is a possibility of humidity (condensation) occurring under the insulation, the outside of the tube will corrode.

copper
Insulation materials for copper must be almost free of nitrate. They may not contain more than 0.02% nitrate.

warranty

Please contact Aalberts integrated piping systems for the most recent warranty conditions that apply to VSH XPress.



VSH XPress

Stainless



R2750 stainless steel tube 1.4401 (AISI 316)

(3 and 6 m length)



dimension	article no.	DN
15 x 1.0 (3 m)	6118068	12
15 x 1.0 (6 m)	6117914	12
18 x 1.0 (3 m)	6118079	15
18 x 1.0 (6 m)	6117925	15
22 x 1.2 (3 m)	6118081	20
22 x 1.2 (6 m)	6117936	20
28 x 1.2 (3 m)	6118090	25
28 x 1.2 (6 m)	6117947	25
35 x 1.5 (3 m)	6118101	32
35 x 1.5 (6 m)	6117958	32
42 x 1.5 (3 m)	6118112	40
42 x 1.5 (6 m)	6117969	40
54 x 1.5 (3 m)	6118123	50
54 x 1.5 (6 m)	6117971	50
76.1 x 2.0 (6 m)	6117980	65
88.9 x 2.0 (6 m)	6117991	80
108 x 2.0 (6 m)	6118002	100

R2751 stainless steel tube 1.4301 (AISI 304)

(6 m length)



dimension	article no.	DN
15 x 1.0	6193407	12
18 x 1.0	6193418	15
22 x 1.2	6193429	20
28 x 1.2	6193431	25
35 x 1.5	6193440	32
42 x 1.5	6193451	40
54 x 1.5	6193462	50
76.1 x 2.0	6118178	65
88.9 x 2.0	6118189	80
108 x 2.0	6118200	100

R2752 stainless steel tube 1.4521 (AISI 444)

(6 m length)



dimension	article no.	DN
15 x 1.0	6194001	12
18 x 1.0	6194012	15
22 x 1.2	6194023	20
28 x 1.2	6194034	25
35 x 1.5	6194045	32
42 x 1.5	6194056	40
54 x 1.5	6194067	50

R2701 straight coupling

(2 x press)



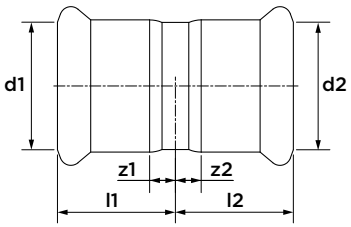

dimension	article no.	l1/l2	z1/z2
12	6198874	21	4
15	6190943	25	5
18	6190954	25	5
22	6190965	26	5
28	6190976	28	5
35	6190987	31	5
42	6190998	36	6
54	6191009	41	6
76.1	6204154	71	16
88.9	6204165	82	19
108	6204176	96	19

R2703 slip coupling
(2 x press)



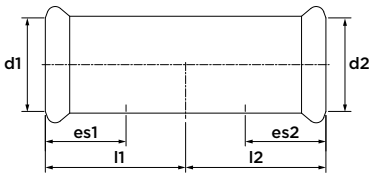

dimension	article no.	l1/l2	es1/es2
15	6191284	40	20
18	6191295	40	20
22	6191306	42	21
28	6191317	46	23
35	6191328	51	26
42	6191339	60	30
54	6191341	70	25
76.1	6204286	115	55
88.9	6204297	129	62
108	6204308	153	77

R2708 bend 90°
(2 x press)



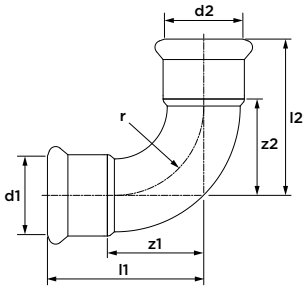

dimension	article no.	l1/l2	z1/z2	r
12	6198885	37	20	14
15	6190206	41	21	18
18	6190217	45	25	22
22	6190228	51	30	27
28	6190239	60	37	34
35	6190241	71	45	42
42	6190250	86	56	51
54	6190261	105	70	65
76.1	6230004	150	95	91
88.9	6230015	174	111	107
108	6230026	215	138	130

R2711 bend 90°
(press x male)



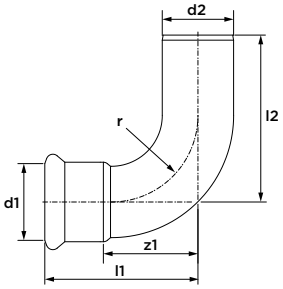

dimension	article no.	l1	l2	z1	r
15	6190349	41	53	21	18
18	6190351	45	51	25	22
22	6190360	51	60	30	27
28	6190371	60	66	37	34
35	6190382	71	76	45	42
42	6190393	86	93	56	51
54	6190404	105	111	70	65
76.1	6230037	150	165	95	91
88.9	6230048	175	190	112	107
108	6230059	216	238	139	130

R2713 bend 45°
(2 x press)



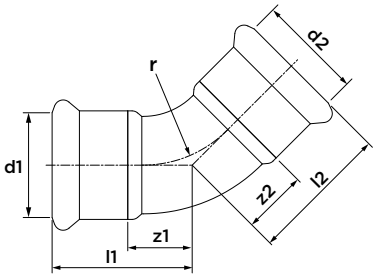

dimension	article no.	l1/l2	z1/z2	r
15	6190041	31	11	18
18	6190052	32	12	22
22	6190063	35	14	27
28	6190074	40	17	34
35	6190085	47	21	42
42	6190096	56	26	51
54	6190107	67	32	65
76.1	6230061	98	43	91
88.9	6230070	112	49	107
108	6230081	138	61	130

R2712 bend 45°

(press x male)



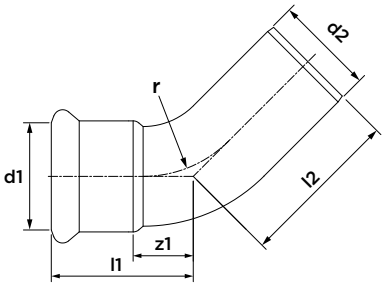

dimension	article no.	l1	l2	z1	r
15	6190118	30	38	10	18
18	6190129	32	39	12	22
22	6190131	35	42	14	27
28	6190140	40	46	17	34
35	6190151	46	51	20	42
42	6190162	56	63	26	51
54	6190173	65	73	30	65
76.1	6230092	98	117	43	91
88.9	6230103	112	131	49	107
108	6230114	138	154	61	130

R2725 bend tube 90°

(2 x male)



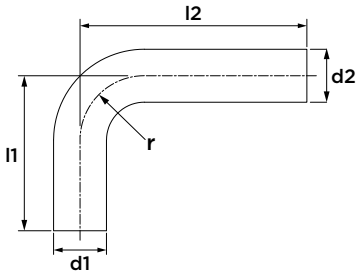

dimension	article no.	l1	l2	r
Ø15	6190272	70	120	18
Ø18	6190283	70	120	22
Ø22	6190294	72	120	27
Ø28	6190305	82	120	34
Ø35	6190316	120	200	42
Ø42	6190327	150	250	51
Ø54	6190338	200	300	65

R2724 bend tube 60°

(2 x male)



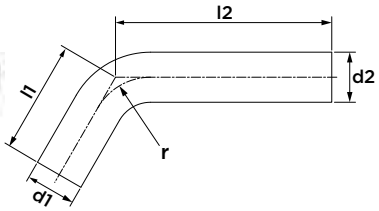

dimension	article no.	l1	l2	r
Ø28	6190184	63	121	34
Ø35	6190195	97	203	42
Ø42	6191878	102	256	51
Ø54	6191889	162	306	65

R2723 bend tube 30°

(2 x male)



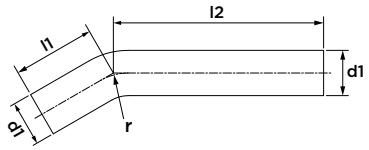

dimension	article no.	l1	l2	r
Ø28	6190021	51	130	34
Ø35	6190030	73	214	42
Ø42	6191856	99	272	51
Ø54	6191867	134	326	65

R2722 bend tube 15°

(2 x male)



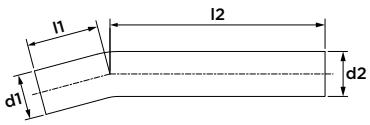

dimension	article no.	l1	l2	r
Ø28	6190008	45	134	34
Ø35	6190019	73	222	42
Ø42	6191834	89	280	51
Ø54	6191845	122	337	65

R2717 crossover

(2 x male)



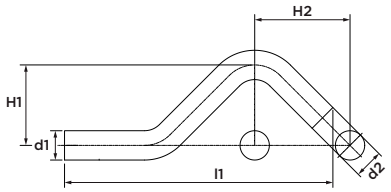

dimension	article no.	l1	H1	H2
Ø15	6191086	142	37	57
Ø18	6191097	150	40	60
Ø22	6191108	163	44	65
Ø28	6191119	195	50	74

R2714 tee

(3 x press)



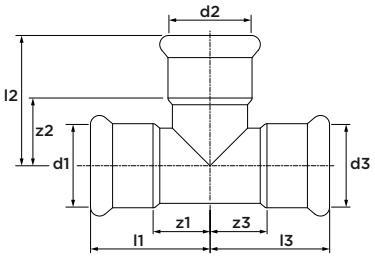

dimension	article no.	l1/l3	l2	z1/z3	z2
12	6198907	28	32	11	15
15	6191350	35	39	15	19
18	6191372	37	41	17	21
22	6191405	40	44	19	23
28	6191449	45	49	22	26
35	6191493	51	55	25	29
42	6191537	60	62	30	32
54	6191581	71	72	36	37
76.1	6204319	116	115	61	60
88.9	6204321	131	127	68	64
108	6204330	156	155	79	78

R2715 tee reduced

(3 x press)



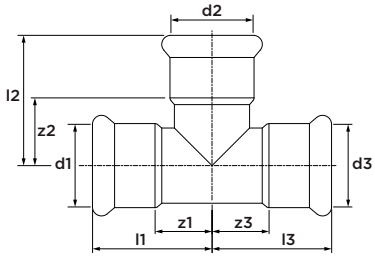

dimension	article no.	l1/l3	l2	z1/z3	z2
18 x 15 x 18	6191361	37	41	17	21
22 x 15 x 22	6191383	40	43	19	23
22 x 18 x 22	6191394	40	43	17	23
28 x 15 x 28	6191416	45	46	22	26
28 x 18 x 28	6191427	45	46	22	26
28 x 22 x 28	6191438	45	47	22	26
35 x 15 x 35	6191451	51	49	25	29
35 x 18 x 35	6191460	51	49	25	29
35 x 22 x 35	6191471	51	50	25	29
35 x 28 x 35	6191482	51	52	25	29
42 x 22 x 42	6191504	60	53	30	32
42 x 28 x 42	6191515	60	55	30	32
42 x 35 x 42	6191526	60	58	30	32
54 x 22 x 54	6191548	71	59	36	38
54 x 28 x 54	6191559	71	61	36	38
54 x 35 x 54	6191561	71	64	36	38
54 x 42 x 54	6191570	71	58	36	28
76.1 x 22 x 76.1	6204341	116	68	61	45
76.1 x 28 x 76.1	6204352	116	71	61	47
76.1 x 35 x 76.1	6204363	116	75	61	48
76.1 x 42 x 76.1	6204374	116	79	61	47
76.1 x 54 x 76.1	6204385	116	80	61	43
88.9 x 22 x 88.9	6204396	131	76	68	53
88.9 x 28 x 88.9	6204407	131	76	68	52
88.9 x 35 x 88.9	6204418	131	83	68	56
88.9 x 42 x 88.9	6204429	131	85	68	53
88.9 x 54 x 88.9	6204431	131	93	68	56
88.9 x 76.1 x 88.9	6204440	131	116	68	61
108 x 22 x 108	6204451	156	85	79	62
108 x 28 x 108	6204462	156	88	79	64
108 x 35 x 108	6204473	156	94	79	67
108 x 42 x 108	6204484	156	96	79	64
108 x 54 x 108	6204495	156	102	79	65
108 x 76.1 x 108	6204506	156	125	79	70
108 x 88.9 x 108	6204517	156	135	79	72

R2718 tee female branch

(press x female thread x press)



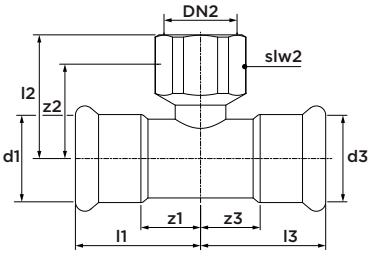

dimension	article no.	l1/l3	l2	z1/z3	z2	slw2
15 x Rp½" x 15	6191592	35	34	15	24	24
18 x Rp½" x 18	6191603	37	35	17	25	24
18 x Rp¾" x 18	6191614	37	37	17	26	30
22 x Rp½" x 22	6191625	40	37	19	27	24
22 x Rp¾" x 22	6191636	40	39	19	28	30
28 x Rp½" x 28	6191647	45	40	22	30	24
28 x Rp¾" x 28	6191658	45	42	22	31	30
28 x Rp1" x 28	6198599	45	46	22	33	38
35 x Rp½" x 35	6191669	51	44	25	34	24
35 x Rp¾" x 35	6191671	51	46	25	35	30
35 x Rp1" x 35	6198601	51	50	25	37	38
42 x Rp½" x 42	6191680	60	46	30	36	24
42 x Rp¾" x 42	6191691	60	48	30	37	30
42 x Rp1" x 42	6198610	60	52	30	39	38
54 x Rp½" x 54	6191702	71	52	36	42	24
54 x Rp¾" x 54	6191724	71	54	36	43	30
54 x Rp1" x 54	6198621	71	58	36	45	38
54 x Rp2" x 54	6191713	71	65	36	47	67
76.1 x Rp¾" x 76.1	6204528	116	68	61	55	30
76.1 x Rp2" x 76.1	6204550	116	81	61	59	65
88.9 x Rp¾" x 88.9	6204539	131	87	68	74	30
88.9 x Rp2" x 88.9	6204561	131	88	68	66	65
108 x Rp¾" x 108	6204541	156	86	79	73	30
108 x Rp2" x 108	6204572	156	98	79	76	65

R2707 reducer

(male x press)



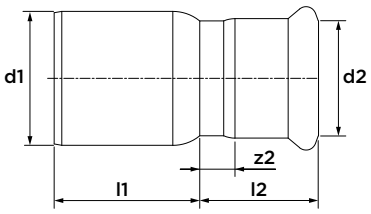

dimension	article no.	l1	l2	z2
Ø15 x 12	6198951	25	25	8
Ø18 x 15	6191121	28	27	7
Ø22 x 15	6191130	33	28	8
Ø22 x 18	6191141	30	28	8
Ø28 x 15	6191152	40	28	8
Ø28 x 18	6191163	38	28	8
Ø28 x 22	6191174	34	29	8
Ø35 x 15	6192221	47	32	12
Ø35 x 18	6191185	46	32	12
Ø35 x 22	6191196	42	29	8
Ø35 x 28	6191207	38	31	8
Ø42 x 15	6192230	57	32	12
Ø42 x 18	6192241	55	32	12
Ø42 x 22	6191218	53	33	12
Ø42 x 28	6191229	51	31	8
Ø42 x 35	6191231	42	34	8
Ø54 x 15	6192252	68	32	12
Ø54 x 18	6192263	69	29	12
Ø54 x 22	6191240	66	33	12
Ø54 x 28	6191251	62	34	11
Ø54 x 35	6191262	60	34	8
Ø54 x 42	6191273	55	40	10
Ø76.1 x 42	6204211	72	79	49
Ø76.1 x 54	6204220	98	42	7
Ø88.9 x 54	6204231	114	42	7
Ø88.9 x 76.1	6204242	88	68	13
Ø108 x 54	6204253	138	66	31
Ø108 x 76.1	6204264	127	69	14
Ø108 x 88.9	6204275	113	77	14

R2705 straight connector

(press x male thread)



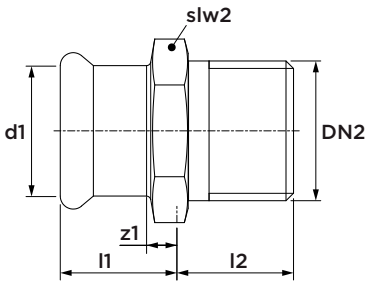

dimension	article no.	l1	l2	z1	slw2
12 x R⅜"	6198918	19	13	2	22
12 x R½"	6198929	20	15	3	24
15 x R½"	6190580	23	17	3	24
15 x R¾"	6190591	24	17	4	27
18 x R½"	6190602	23	15	3	27
18 x R¾"	6190613	24	17	4	27
22 x R½"	6190635	27	15	6	32
22 x R¾"	6190646	27	16	6	32
22 x R1"	6190624	29	20	8	34
28 x R¾"	6190679	28	17	5	38
28 x R1"	6190657	28	20	5	38
28 x R1¼"	6190668	31	21	8	43
35 x R1"	6190681	33	20	7	45
35 x R1¼"	6190701	33	22	7	49
35 x R1½"	6190690	34	22	8	49
42 x R1¼"	6190723	37	22	7	54
42 x R1½"	6190712	37	22	7	54
54 x R1½"	6190734	43	22	8	67
54 x R2"	6190745	43	26	8	67
76.1 x R2½"	6204759	64	33	9	82
88.9 x R3"	6204761	73	36	10	95

R2702 straight connector
(press x female thread)



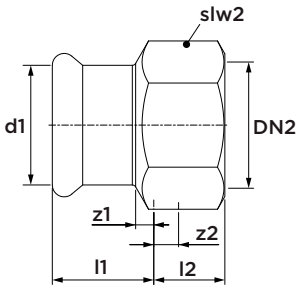

dimension	article no.	l1	l2	z1	z2	slw2
12 x Rp⅜"	6198931	19	13	3	4	24
12 x Rp½"	6198940	19	15	2	4	24
15 x Rp½"	6190415	22	15	2	5	24
15 x Rp¾"	6190426	23	17	3	6	30
18 x Rp½"	6190437	22	15	2	5	27
18 x Rp¾"	6190448	22	17	2	6	30
22 x Rp½"	6190461	21	15	0	5	32
22 x Rp¾"	6190470	23	17	2	6	32
22 x Rp1"	6190459	24	20	3	7	38
28 x Rp½"	6193308	26	12	3	1	38
28 x Rp¾"	6190503	23	17	0	6	38
28 x Rp1"	6190481	25	20	2	7	38
28 x Rp1¼"	6190492	25	22	2	7	46
35 x Rp1"	6190514	27	20	1	7	46
35 x Rp1¼"	6190536	28	22	2	7	46
35 x Rp1½"	6190525	28	22	2	8	54
42 x Rp1¼"	6190558	30	22	0	0	54
42 x Rp1½"	6190547	32	22	2	8	54
54 x Rp1½"	6190569	36	22	1	8	67
54 x Rp2"	6190571	37	26	2	8	67

R2709 angle adapter 90°
(press x female thread)



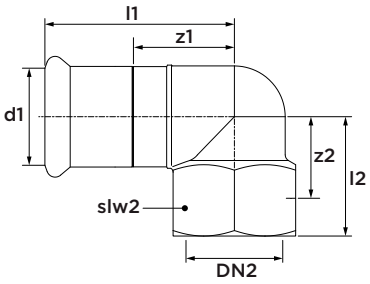

dimension	article no.	l1	l2	z1	z2	slw2
15 x Rp½"	6190822	44	28	24	13	24
18 x Rp½"	6190833	44	28	24	13	24
22 x Rp½"	6198456	45	31	24	16	24
22 x Rp¾"	6190844	49	33	28	17	30
28 x Rp½"	6198467	48	35	25	20	24
28 x Rp¾"	6198478	51	35	28	19	30
28 x Rp1"	6190855	55	37	32	24	38
35 x Rp½"	6198489	56	35	30	20	24
35 x Rp¾"	6198491	58	37	32	21	30
35 x Rp1"	6198500	58	41	32	28	38
35 x Rp1¼"	6190866	62	42	36	27	46

R2728 angle adapter 90°
(press x male thread)



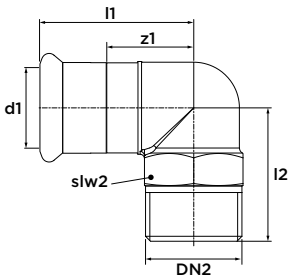

dimension	article no.	l1	l2	z1	slw2
15 x R½"	6190877	43	31	23	22
18 x R½"	6190888	44	32	24	24
22 x R¾"	6190899	49	39	28	30
28 x R1"	6190901	53	46	30	34
35 x R1¼"	6190910	60	52	34	43
42 x R1½"	6190921	69	58	39	49
54 x R2"	6190932	82	68	47	62

R2710 angle adapter 90°
(male x female thread)



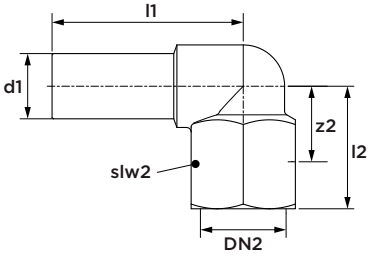

dimension	article no.	l1	l2	z2	slw2
15 x Rp½"	6192274	44	28	13	24

R2704 coupling with nut
(press x female thread)



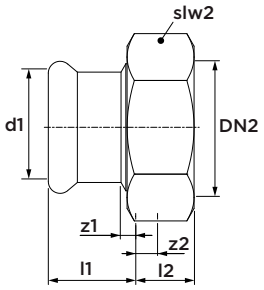

dimension	article no.	l1	l2	z1	z2	slw2
15 x G¾"	6191735	29	8	9	2	30
18 x G¾"	6191746	29	8	9	2	30
22 x G1"	6191757	30	10	9	2	37
28 x G1¼"	6191768	31	10	8	2	46
35 x G1½"	6191779	34	11	8	2	52
42 x G1¾"	6191781	41	11	11	2	58
54 x G2⅜"	6191790	47	11	12	3	75

including flat seal

R2735 straight union
(press x male thread)



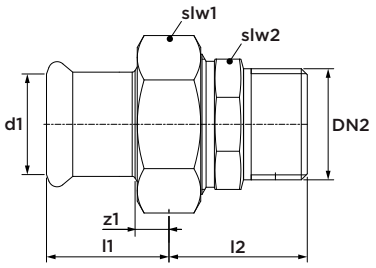

dimension	article no.	l1	z1	l2	slw1	slw2
15 x R½"	6192120	29	9	33	30	25
15 x R¾"	6192131	29	9	36	30	32
18 x R½"	6192142	29	9	33	30	25
18 x R¾"	6192153	29	9	36	30	32
22 x R½"	6192164	30	9	33	37	25
22 x R¾"	6192175	30	9	29	37	32
22 x R1"	6192186	30	9	42	37	39
28 x R1"	6192197	31	8	42	46	39
35 x R1¼"	6192208	34	8	44	52	49
42 x R1½"	6192219	41	11	44	58	51
54 x R2"	6192296	47	12	53	75	65

including flat seal

R2738 straight union
(press x female thread)



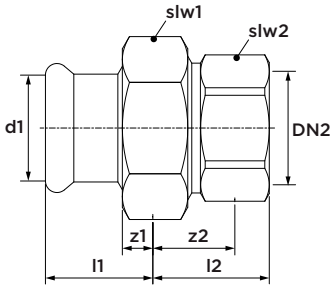

dimension	article no.	l1	l2	z1	z2	slw1	slw2
15 x Rp½"	6192021	29	28	9	18	30	24
15 x Rp¾"	6192032	29	31	9	20	30	30
18 x Rp½"	6192043	29	28	9	18	30	24
18 x Rp¾"	6192054	29	31	9	20	30	30
22 x Rp¾"	6192065	30	33	9	22	37	30
22 x Rp1"	6192076	30	36	9	23	37	38
28 x Rp1"	6192087	31	34	8	21	46	38
35 x Rp1¼"	6192098	34	39	8	24	52	46
42 x Rp1½"	6192109	41	41	11	27	58	54
54 x Rp2"	6192111	47	44	12	26	75	67

including flat seal

R2739 straight union
(2x press)



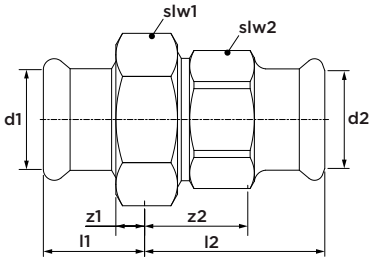

dimension	article no.	l1	l2	z1	z2	slw1	slw2
15	6192615	30	35	10	15	30	27
18	6192626	30	35	10	15	30	25
22	6192637	31	42	10	21	37	32
28	6192648	32	42	9	19	46	39
35	6192659	35	45	9	19	52	45
42	6192661	42	49	12	19	58	51
54	6192670	48	56	13	21	75	65

including flat seal

R2716 wallplate 90°

(press x female thread)



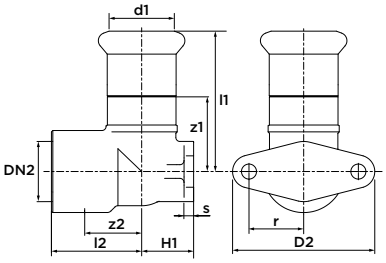

dimension	article no.	l1	l2	z1	z2	H1	D2	s	r
15 x Rp½"	6191801	45	28	25	13	13	46	3	17
18 x Rp½"	6191812	45	28	25	13	16	46	3	17
22 x Rp¾"	6191823	49	33	28	17	19	52	4	20

R2737 wallplate 90° long

(press x female thread)



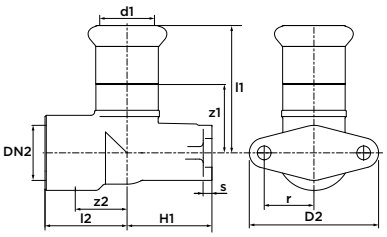

dimension	article no.	l1	l2	z1	z2	H1	D2	s	r
15 x Rp½"	6191999	45	28	25	13	35	52	4	20
18 x Rp½"	6192001	45	28	25	13	35	52	4	20
22 x Rp¾"	6192010	49	33	28	17	31	52	4	20

R2719 wallplate 90°

(2 x press x female thread)



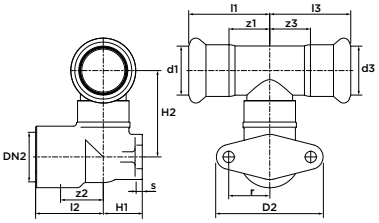

dimension	article no.	l1/l3	l2	z1/z3	z2	H1	H2	D2	s	r
15 x Rp½" x 15	6192285	35	28	15	13	13	31	46	3	17

R2726 flanged connector PN 10/16

(1 x press)



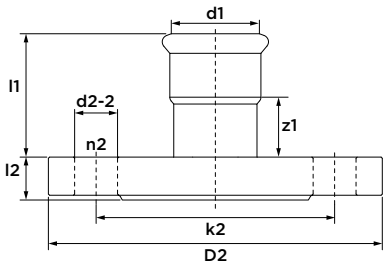

dimension	DN	article no.	l1	l2	z1	k2	D2	d2-2	n2
15	15	6190756	43	13	23	65	95	14	4
18	15	6190767	44	13	24	65	95	14	4
22	20	6190778	45	14	24	75	105	14	4
28	25	6190789	49	16	26	85	115	14	4
35	32	6190791	51	17	26	100	140	18	4
42	40	6190800	59	18	29	110	150	18	4
54	50	6190811	69	18	34	125	165	18	4
76.1	65	6204121	108	18	53	145	185	18	4
88.9	80	6204132	127	20	64	160	200	18	8
108	100	6204143	147	20	70	180	220	18	8

R2729 stop end
(1 x press)



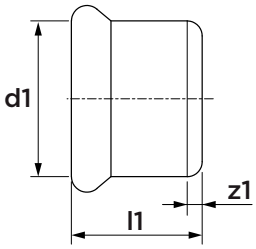

dimension	article no.	l1	z1
15	6191011	23	3
18	6191020	23	3
22	6191031	24	3
28	6191042	26	3
35	6191053	29	3
42	6191064	37	7
54	6191075	42	7
76.1	6204187	95	40
88.9	6204198	107	44
108	6204209	127	50

R2736 pump coupling
(press x flat seal)



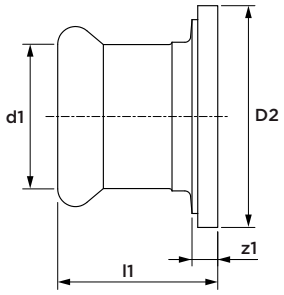

dimension	article no.	l1	z1	D2
15 x 1⅛	6191891	30	10	34
15 x 1½	6191900	30	10	44
18 x 1¼	6191911	29	9	39
18 x 1½	6191922	29	9	44
22 x 1¼	6191933	28	7	39
22 x 1½	6191944	28	7	44
28 x 1½	6191955	31	8	44
35 x 2	6191966	33	7	56
42 x 2¼	6191977	37	7	62
54 x 2¾	6191988	44	9	78

R2748 transition for grooved couplings
(press x groove)



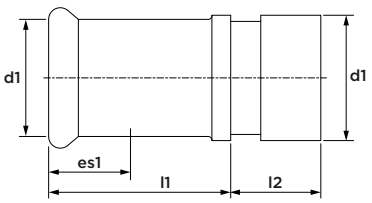

dimension	article no.	l1	l2	es1
28 x Ø33.7	6198555	49	24	23
35 x Ø42.4	6198566	54	24	26
42 x Ø48.3	6198577	61	24	30
54 x Ø60.3	6198588	73	24	35
76.1 x Ø73	6198841	68	24	50
76.1 x Ø76.1	6193319	66	24	55
88.9 x Ø88.9	6193321	76	24	63
108 x Ø114	6193330	84	26	77

R2741 slip coupling
(press x female thread)



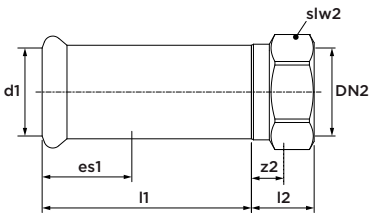

dimension	article no.	l1	l2	z2	es1	slw2
22 x Rp½"	6198511	70	19	15	21	28
22 x Rp¾"	6198522	70	24	17	21	32
28 x Rp½"	6198533	70	21	15	23	34
28 x Rp¾"	6198544	70	21	17	23	34

R2747 axial compensator

(2 x press)

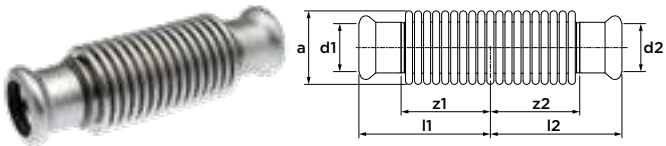

dimension	article no.	l1/l2	z1/z2	a	Δl
15	6198302	55	35	24	-14
18	6198313	53	33	27	-16
22	6198324	60	39	37	-20
28	6198335	65	42	44	-22
35	6198346	70	44	50	-24
42	6198357	77	47	60	-24
54	6198368	90	55	72	-30

the axial compensators do not carry any potable water approvals

R2756 axial compensator

(2 x male)

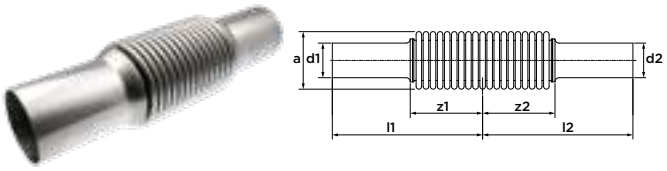

dimension	article no.	l1/l2	z1/z2	a	Δl
76.1	6198379	138	61	92	-30
88.9	6198381	145	90	106	-30
108	6198390	173	110	130	-30

the axial compensators do not carry any potable water approvals

C1451 o-ring Leak Before Pressed (LBP)

(black, EPDM) for carbon steel and stainless steel



dimension	article no.
15	6222216
18	6222227
22	6222238
28	6222249
35	6222251
42	6222260
54	6222271

R2760 o-ring

(black, EPDM) for carbon steel and stainless steel



dimension	article no.
76.1	6208015
88.9	6208026
108	6208037

C1452 flat seal

(black, EPDM) for carbon steel and stainless steel



dimension	article no.
15-18	6228013
22	6228024
28	6228035
35	6228046
42	6228057
54	6228068

R2764 o-ring (LBP) for special applications

(green, FPM) for carbon steel and stainless steel



dimension	article no.
15	6119401
18	6119410
22	6119421
28	6119432
35	6119443
42	6119454
54	6119465

R2761 o-ring for special applications

(green, FPM) for carbon steel and stainless steel



dimension	article no.
76.1	6119377
88.9	6119388
108	6119399

R2767 flat seal for special applications

(green, FPM) for carbon steel and stainless steel



dimension	article no.
15-18	6118301
22	6118310
28	6118321
35	6118332
42	6118343
54	6118354

R2763 o-ring (LBP) for steam applications

(grey, FPM) for stainless steel



dimension	article no.
15	6119784
18	6119795
22	6119806
28	6119817
35	6119828
42	6119839
54	6119841

VSH XPress

Stainless Gas



R2750 stainless steel tube 1.4401

(6m length)



dimension	article no.	DN
15 x 1.0	6117914	12
18 x 1.0	6117925	15
22 x 1.2	6117936	20
28 x 1.2	6117947	25
35 x 1.5	6117958	32
42 x 1.5	6117969	40
54 x 1.5	6117971	50
76.1 x 2.0	6117980	65
88.9 x 2.0	6117991	80
108 x 2.0	6118002	100

R2701G straight coupling

(2 x press)



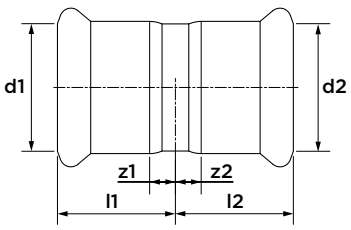

dimension	article no.	l1/l2	z1/z2
15	6210006	26	6
18	6210017	26	6
22	6210028	30	9
28	6210039	31	8
35	6210041	36	10
42	6210050	40	10
54	6210061	45	10
76.1	6212131	71	16
88.9	6212140	82	19
108	6212151	96	19

R2703G slip coupling

(2 x press)



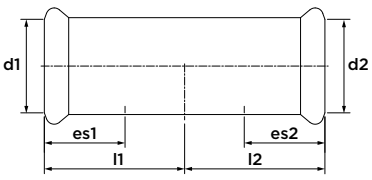

dimension	article no.	l1/l2	es1/es2
15	6210105	36	20
18	6210116	39	20
22	6210127	41	21
28	6210138	45	23
35	6210149	50	26
42	6210151	58	30
54	6210160	70	35

R2708G bend 90°

(2 x press)



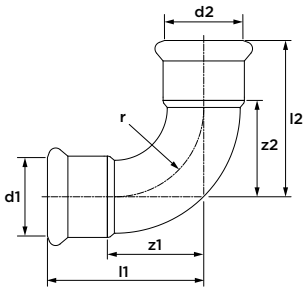

dimension	article no.	l1/l2	z1/z2	r
15	6210171	48	27	23
18	6210182	53	32	27
22	6210193	60	37	33
28	6210204	71	47	42
35	6210215	87	60	53
42	6210226	115	83	63
54	6210237	142	105	81
76.1	6212162	150	95	91
88.9	6212173	174	111	107
108	6212184	215	138	130

R2711G bend 90°

(press x male)



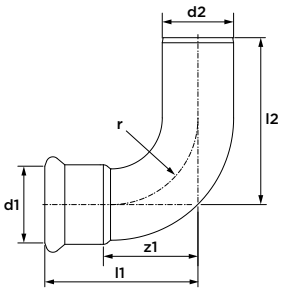

dimension	article no.	l1	l2	z1	r
15 x Ø15	6210270	48	56	27	23
18 x Ø18	6210281	53	62	32	27
22 x Ø22	6210292	60	68	37	33
28 x Ø28	6210303	71	80	47	42
35 x Ø35	6210314	87	93	60	53
42 x Ø42	6210325	115	125	83	63
54 x Ø54	6210336	142	149	105	81
76.1 x Ø76.1	6212195	150	165	95	91
88.9 x Ø88.9	6212206	175	190	112	107
108 x Ø108	6212217	216	238	138	130

R2713G bend 45°

(2 x press)



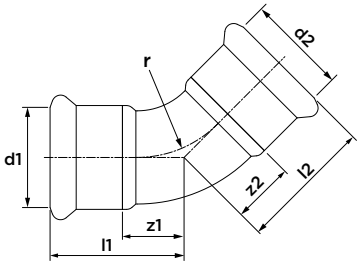

dimension	article no.	l1/l2	z1/z2	r
15	6210371	37	16	23
18	6210380	38	17	27
22	6210391	44	21	33
28	6210402	51	27	42
35	6210413	59	32	53
42	6210424	77	45	63
54	6210435	88	51	81
76.1	6212228	98	43	91
88.9	6212239	112	49	107
108	6212241	138	61	130

R2712G bend 45°

(press x male)



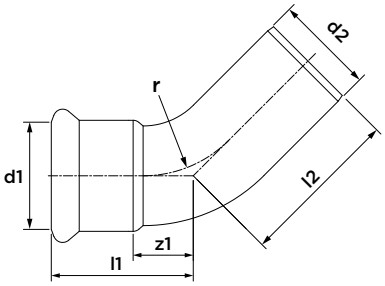

dimension	article no.	l1	l2	z1	r
15 x Ø15	6210479	37	48	16	23
18 x Ø18	6210481	38	45	17	27
22 x Ø22	6210490	44	53	21	33
28 x Ø28	6210501	51	60	27	42
35 x Ø35	6210512	59	66	32	53
42 x Ø42	6210523	77	80	45	63
54 x Ø54	6210534	88	97	51	81
76.1 x Ø76.1	6212250	98	117	43	91
88.9 x Ø88.9	6212261	112	131	49	107
108 x Ø108	6212272	138	154	61	130

R2714G tee

(3 x press)



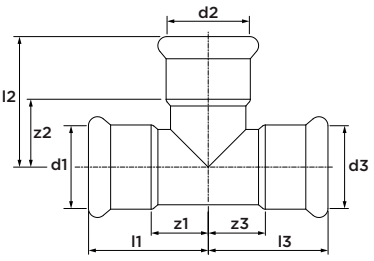

dimension	article no.	l1/l3	l2	z1/z3	z2
15	6210787	37	35	16	14
18	6210798	40	35	19	14
22	6210809	41	40	18	17
28	6210811	46	45	22	21
35	6210820	51	55	24	28
42	6210831	59	61	27	29
54	6210842	71	72	34	35
76.1	6212283	116	115	61	60
88.9	6212294	156	156	68	68
108	6212305	231	231	79	78

R2715G tee reduced

(3 x press)



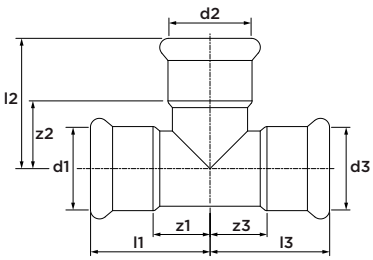

dimension	article no.	l1/l2	l3	z1/z3	z2
18 x 15 x 18	6210886	40	36	19	15
22 x 15 x 22	6210897	41	39	18	18
22 x 18 x 22	6210908	41	38	18	17
28 x 15 x 28	6210919	46	42	22	21
28 x 18 x 28	6210921	46	42	22	21
28 x 22 x 28	6210930	46	45	22	22
35 x 15 x 35	6210941	51	45	24	24
35 x 18 x 35	6210952	51	45	24	24
35 x 22 x 35	6210963	51	46	24	23
35 x 28 x 35	6210974	51	48	24	24
42 x 22 x 42	6210985	59	51	27	28
42 x 28 x 42	6210996	59	53	27	29
42 x 35 x 42	6211007	59	60	27	33
54 x 22 x 54	6211018	71	59	34	34
54 x 28 x 54	6211029	71	60	34	36
54 x 35 x 54	6211031	71	66	34	39
54 x 42 x 54	6211040	71	64	34	32
76.1 x 22 x 76.1	6212316	116	68	61	45
76.1 x 28 x 76.1	6212327	116	71	61	47
76.1 x 35 x 76.1	6212338	116	75	61	48
76.1 x 42 x 76.1	6212349	116	79	61	47
76.1 x 54 x 76.1	6212351	116	80	61	43
88.9 x 22 x 88.9	6212360	131	76	68	53
88.9 x 28 x 88.9	6212371	131	76	68	52
88.9 x 35 x 88.9	6212382	131	83	68	56
88.9 x 42 x 88.9	6212393	131	85	68	53
88.9 x 54 x 88.9	6212404	131	93	68	56
108 x 22 x 108	6212415	156	85	79	62
108 x 28 x 108	6212426	156	88	79	64
108 x 35 x 108	6212437	156	94	79	67
108 x 42 x 108	6212448	156	96	79	64
108 x 54 x 108	6212459	156	102	79	65

R2718G tee

(press x female thread x press)



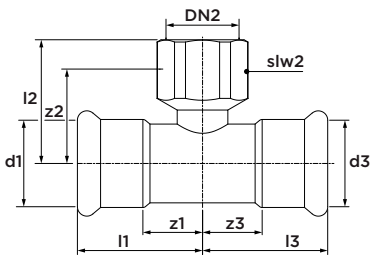

dimension	article no.	l1/l3	l2	z1/z3	z2	slw2
15 x Rp½" x 15	6211051	37	37	16	25	24
18 x Rp½" x 18	6211062	40	39	19	27	24
18 x Rp¾" x 18	6211073	40	43	19	30	30
22 x Rp½" x 22	6211084	41	41	18	29	24
22 x Rp¾" x 22	6211095	41	41	18	28	30
28 x Rp½" x 28	6211106	46	44	22	32	24
28 x Rp¾" x 28	6211117	46	45	22	32	30
35 x Rp½" x 35	6211128	51	48	24	36	24
35 x Rp¾" x 35	6211139	51	48	24	35	30
42 x Rp½" x 42	6211141	59	46	27	34	24
54 x Rp½" x 54	6211150	71	55	34	43	24
54 x Rp¾" x 54	6211161	71	69	34	47	30
54 x Rp2" x 54	6211172	71	58	34	45	65
76.1 x Rp¾" x 76.1	6212461	116	81	61	59	30
76.1 x Rp2" x 76.1	6212470	116	68	61	55	65
88.9 x Rp¾" x 88.9	6212481	131	88	68	66	30
88.9 x Rp2" x 88.9	6212492	131	87	68	74	65
108 x Rp¾" x 108	6212503	156	86	79	73	30
108 x Rp2" x 108	6212514	156	98	79	76	65

R2707G reducer
(male x press)



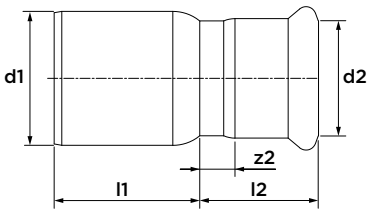

dimension	article no.	l1	l2	z2
Ø18 x 15	6210591	29	26	6
Ø22 x 15	6210600	34	26	6
Ø22 x 18	6210611	46	26	6
Ø28 x 15	6210622	32	25	5
Ø28 x 18	6210633	51	26	6
Ø28 x 22	6210644	38	29	8
Ø35 x 22	6210655	43	40	19
Ø35 x 28	6210666	43	30	7
Ø42 x 28	6210677	58	40	17
Ø42 x 35	6210688	59	40	17
Ø54 x 28	6210699	42	37	11
Ø54 x 35	6210701	78	50	24
Ø54 x 42	6210710	60	37	7
Ø76.1 x 42	6212525	101	50	20
Ø76.1 x 54	6212536	154	50	15
Ø88.9 x 54	6212547	90	50	15
Ø88.9 x 76.1	6212558	106	50	15
Ø108 x 54	6212569	131	65	10
Ø108 x 76.1	6212571	91	65	10
Ø108 x 88.9	6212580	112	78	15

R2705G straight connector
(press x male thread)



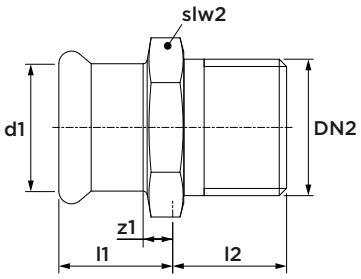

dimension	article no.	l1	l2	z1	slw2
15 x R½"	6211238	25	27	5	22
18 x R½"	6211249	25	27	5	22
22 x R½"	6211251	26	42	5	22
22 x R¾"	6211260	26	32	5	27
22 x R1"	6211271	26	46	5	36
28 x R1"	6211282	28	34	5	36
35 x R1"	6211304	31	51	5	36
35 x R1¼"	6211293	31	39	5	46
35 x R1½"	6211315	31	53	5	50
42 x R1½"	6211326	35	40	5	50
54 x R2"	6211337	40	47	5	65
76.1 x R2½"	6212591	60	65	5	80
88.9 x R3"	6212602	68	70	5	95

R2728G angle adapter 90°
(press x male thread)



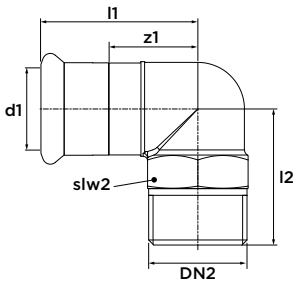

dimension	article no.	l1	z1	l2	slw2
15 x R½"	6211458	53	32	36	22
18 x R½"	6211469	51	30	36	22
22 x R¾"	6211471	58	35	40	28
28 x R1"	6211480	63	39	44	36
35 x R1¼"	6211491	71	44	48	46

R2702G straight connector

(press x female thread)



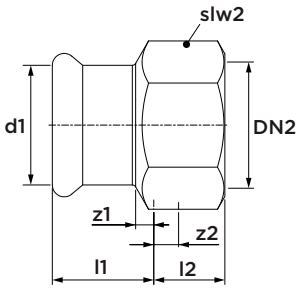

dimension	article no.	l1	l2	z1	z2	slw2
15 x Rp½"	6211348	27	27	7	13	22
18 x Rp½"	6211359	26	26	6	12	22
22 x Rp½"	6211361	26	26	5	12	22
22 x Rp¾"	6211370	28	28	7	13	27
22 x Rp1"	6211381	35	35	14	17	36
28 x Rp1"	6211392	31	31	8	14	36
35 x Rp1"	6211414	41	41	15	23	46
35 x Rp1¼"	6211403	36	36	10	18	50
42 x Rp1½"	6211425	37	37	7	18	50
54 x Rp2"	6211447	53	53	18	34	65

R2741G coupling with nut

(press x female thread)



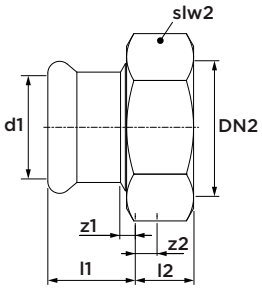

dimension	article no.	l1	l2	z1	z2	slw2
15 x G⅞"	6211801	39	8	19	2	30
22 x G1⅛"	6211581	43	8	22	2	37
28 x G1⅜"	6211590	45	10	22	2	46

including flat seal

R2709G angle adapter 90°

(press x female thread)



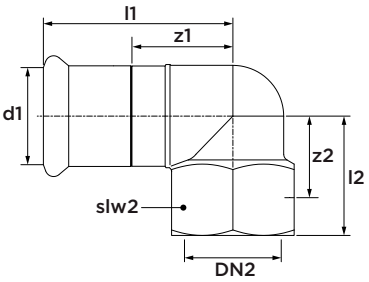

dimension	article no.	l1	l2	z1	z2	slw2
15 x Rp½"	6211502	53	36	32	24	24
18 x Rp½"	6211513	52	39	31	27	24
22 x Rp¾"	6211524	57	46	34	33	30
28 x Rp1"	6211535	71	54	47	38	38
35 x Rp1¼"	6211546	72	62	45	45	46

R2729G stop end

(1 x press)



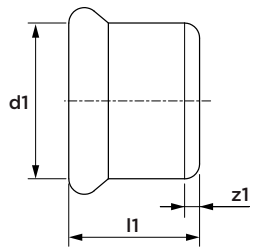

dimension	article no.	l1	z1
15	6212052	37	16
18	6212063	40	19
22	6212074	41	18
28	6212085	46	22
35	6212096	51	24
42	6212107	59	27
54	6212118	72	35

R2716G wallplate 90°

(press x female thread)



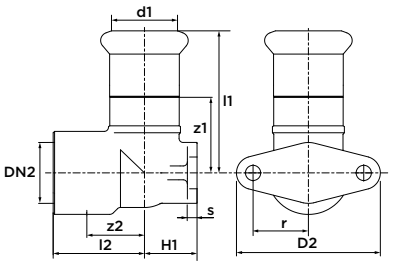

dimension	article no.	l1	l2	z1	z2	H2	D2	s	r
15 x Rp½"	6211557	46	31	25	19	43	46	4	17
18 x Rp½"	6211568	47	31	26	19	44	46	4	17
22 x Rp¾"	6211579	52	35	29	22	51	52	4	20

R2742G flat seal for stainless steel gas

(yellow, NBR) for stainless steel gas



dimension	article no.
22	6211689
28	6211691
35	6211700
42	6211711
54	6211722

R2726G flanged connector PN 10/16

(1 x press)



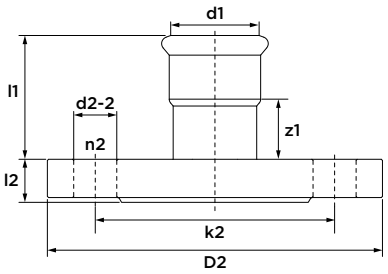

dimension	DN	article no.	l1	l2	z1	k2	D2	d2-2	n2
22	20	6211601	47	12	27	75	105	14	4
28	25	6211612	51	14	33	85	115	14	4
35	32	6211623	55	15	37	100	140	18	4
42	40	6211634	61	16	43	110	150	18	4
54	50	6211645	68	18	57	125	165	18	4
76.1	65	6212613	108	18	53	145	185	18	4
88.9	80	6212624	127	20	64	160	200	18	8
108	100	6212635	147	20	70	180	220	18	8

R2755G o-ring

(yellow, HNBR) for stainless steel gas



dimension	article no.
15	6211911
18	6211920
22	6211931
28	6211942
35	6211953
42	6211964
54	6211975
76.1	6218102
88.9	6218113
108	6218124



VSH XPress

Carbon

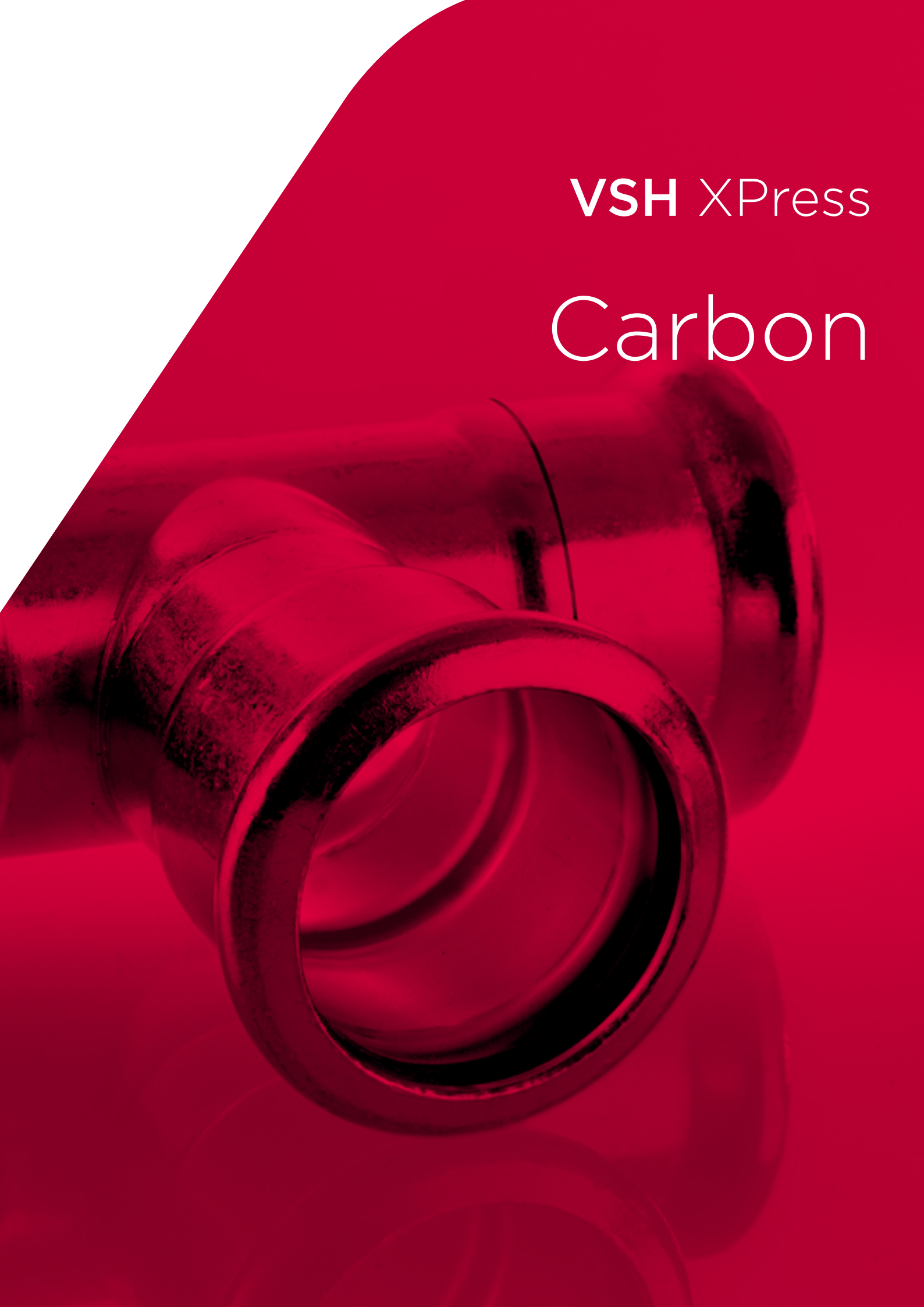

C1459 carbon steel tube
(3 and 6 m length)



dimension	article no.	DN
12 x 1.2 (3 m)	6206266	10
12 x 1.2 (6 m)	6205144	10
15 x 1.2 (3 m)	6206277	12
15 x 1.2 (6 m)	6205155	12
18 x 1.2 (3 m)	6206288	15
18 x 1.2 (6 m)	6205166	15
22 x 1.5 (3 m)	6206299	20
22 x 1.5 (6 m)	6205177	20
28 x 1.5 (3 m)	6206301	25
28 x 1.5 (6 m)	6205188	25
35 x 1.5 (3 m)	6206310	32
35 x 1.5 (6 m)	6205199	32
42 x 1.5 (3 m)	6206321	40
42 x 1.5 (6 m)	6205201	40
54 x 1.5 (3 m)	6206332	50
54 x 1.5 (6 m)	6205221	50
66.7 x 1.5 (6 m)	6204836	60
76.1 x 2.0 (6 m)	6204803	65
88.9 x 2.0 (6 m)	6204814	80
108 x 2.0 (6 m)	6204825	100

C1460 carbon steel tubes with PP-coating
(6 m length) polypropylene-coated



dimension	article no.	DN
15 x 1.2	6204682	12
18 x 1.2	6204693	15
22 x 1.5	6204704	20
28 x 1.5	6204715	25
35 x 1.5	6204726	32
42 x 1.5	6204737	40
54 x 1.5	6204748	50

C1461 VSH XPress sprinkler carbon tube
(6 m length)



dimension	article no.	DN
22 x 1.5	6241114	20
28 x 1.5	6241125	25
35 x 1.5	6241136	32
42 x 1.5	6241147	40
54 x 1.5	6241158	50
76.1 x 2.0	6241378	65
88.9 x 2.0	6241389	80
108 x 2.0	6241391	100

C1401 straight coupling
(2 x press)



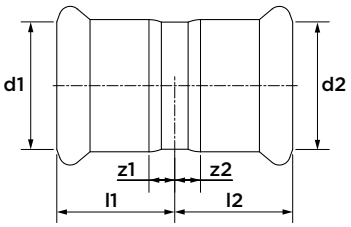

dimension	article no.	l1/l2	z1/z2
12	6201351	24	7
15	6201360	25	5
18	6201371	25	5
22	6201382	26	5
28	6201393	28	5
35	6201404	31	5
42	6201415	37	7
54	6201426	41	6
66.7	6340411	60	10
76.1	6206200	63	8
88.9	6206211	72	9
108	6206222	86	9

C1403 slip coupling

(2 x press)



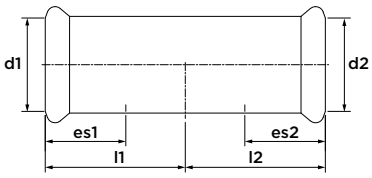

dimension	article no.	l1/l2	es1/es2
12	6201437	34	17
15	6201448	40	20
18	6201459	40	20
22	6201461	42	21
28	6201470	46	23
35	6201481	52	26
42	6201492	61	30
54	6201503	70	35
66.7	6341357	99	50
76.1	6206233	115	55
88.9	6206244	131	63
108	6206255	151	77

C1432 combination tube

(not galvanized, welding end x male)



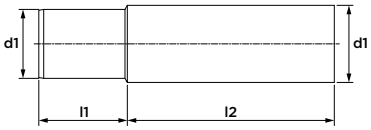

dimension	article no.	l1	l2
Ø17 x Ø15	6207817	35	85
Ø20 x Ø18	6207828	40	80
Ø24 x Ø22	6207168	48	72
Ø31 x Ø28	6207179	35	85
Ø38 x Ø35	6201514	35	85
Ø44.5 x Ø42	6201525	32	88
Ø57 x Ø54	6201536	32	88
Ø80.5 x Ø76.1	6206530	100	130
Ø94.9 x Ø88.9	6206541	115	115
Ø110 x Ø108	6206552	115	115

after welding, a protective coating is required against corrosion!

C1408 bend 90°

(2 x press)



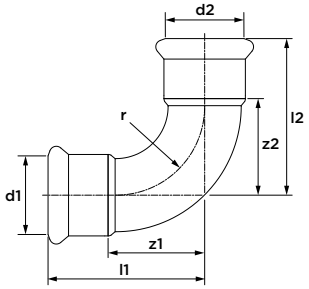

dimension	article no.	l1/l2	z1/z2	r
12	6201547	35	18	15
15	6201558	41	21	18
18	6201569	45	25	22
22	6201571	51	30	27
28	6201580	61	38	34
35	6201591	72	46	42
42	6201602	87	57	51
54	6201613	105	70	65
66.7	6340281	145	95	80
76.1	6208004	155	100	92
88.9	6208048	179	116	107
108	6208059	216	139	130

C1411 bend 90°

(press x male)



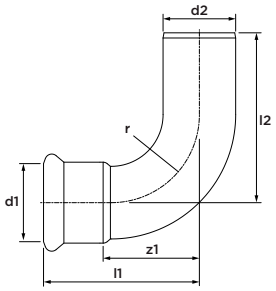

dimension	article no.	l1	l2	z1	r
12 x Ø12	6201624	35	42	18	15
15 x Ø15	6201635	41	49	21	18
18 x Ø18	6201646	45	51	25	22
22 x Ø22	6201657	51	58	30	27
28 x Ø28	6201668	61	66	38	34
35 x Ø35	6201679	72	76	46	42
42 x Ø42	6201681	87	93	57	51
54 x Ø54	6201690	105	111	70	65
66.7 x Ø66.7	6340290	145	157	95	80
76.1 x Ø76.1	6208061	155	168	100	92
88.9 x Ø88.9	6208070	179	193	116	107
108 x Ø108	6208081	216	233	139	130

C1413 bend 45°

(2 x press)



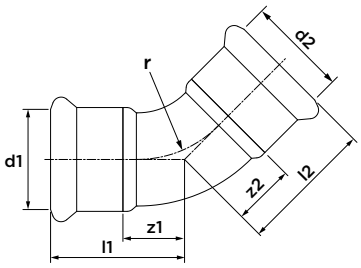

dimension	article no.	l1/l2	z1/z2	r
15	6201701	31	11	18
18	6201712	32	12	22
22	6201723	35	14	27
28	6201734	40	17	34
35	6201745	46	20	42
42	6201756	56	26	51
54	6201767	67	32	65
66.7	6340312	98	48	80
76.1	6208125	101	46	92
88.9	6208136	116	53	107
108	6208147	139	62	130

C1412 bend 45°

(press x male)



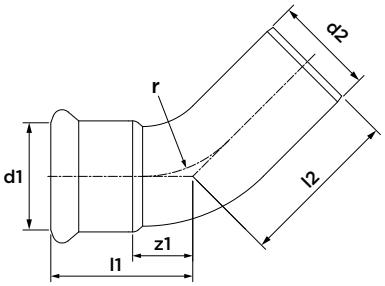

dimension	article no.	l1	l2	z1	r
15 x Ø15	6201778	31	38	11	18
18 x Ø18	6201789	32	39	12	22
22 x Ø22	6201791	35	42	14	27
28 x Ø28	6201800	40	46	17	34
35 x Ø35	6201811	46	51	20	42
42 x Ø42	6201822	56	63	26	51
54 x Ø54	6201833	67	73	32	65
66.7 x Ø66.7	6340301	98	110	48	80
76.1 x Ø76.1	6208092	101	114	46	92
88.9 x Ø88.9	6208103	116	130	53	107
108 x Ø108	6208114	139	157	62	130

C1425 bend 90°

(2 x male)



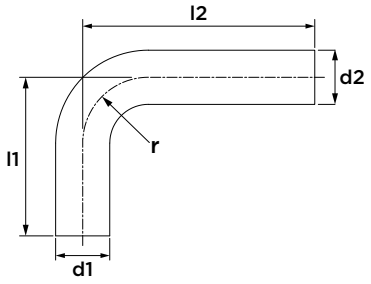

dimension	article no.	l1	l2	r
Ø12	6201844	72	122	14
Ø15	6201855	72	122	18
Ø18	6201866	72	122	22
Ø22	6201877	74	122	27
Ø28	6201888	84	122	34
Ø35	6201899	122	202	42
Ø42	6201901	152	252	51
Ø54	6201910	202	302	65

C1417 crossover

(2 x male)



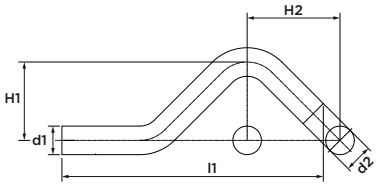

dimension	article no.	l1	H1	H2
Ø12	6201921	138	35	55
Ø15	6201932	142	37	57
Ø18	6201943	149	40	60
Ø22	6201954	163	44	65
Ø28	6201965	194	50	74

C1414 tee

(3 x press)



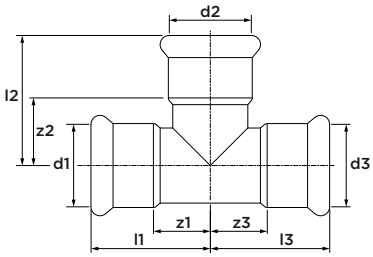

dimension	article no.	l1/l3	l2	z1/z3	z2
12	6202482	31	40	14	23
15	6202493	35	44	15	24
18	6202504	37	46	17	26
22	6202515	40	49	19	28
28	6202526	45	54	22	31
35	6202537	52	60	26	34
42	6202548	61	67	31	37
54	6202559	71	78	36	43
66.7	6340334	99	99	49	49
76.1	6206442	115	110	60	55
88.9	6206453	130	128	67	65
108	6206464	155	153	78	76

C1415 tee reduced

(3 x press)



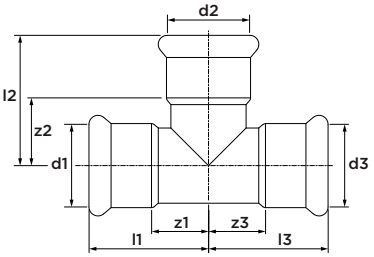

dimension	article no.	l1/l3	l2	z1/z3	z2
12 x 15 x 12	6202768	31	43	14	23
15 x 12 x 15	6202561	35	41	15	24
15 x 18 x 15	6202779	35	44	15	24
15 x 22 x 15	6202781	35	48	15	27
18 x 12 x 18	6202570	37	43	17	26
18 x 15 x 18	6202581	37	46	17	26
18 x 22 x 18	6202790	37	47	17	26
22 x 12 x 22	6202592	40	45	19	28
22 x 15 x 22	6202603	40	48	19	28
22 x 18 x 22	6202614	40	48	19	28
22 x 28 x 22	6202801	40	52	19	29
28 x 15 x 28	6202625	45	51	22	31
28 x 18 x 28	6202636	45	51	22	31
28 x 22 x 28	6202647	45	52	22	31
35 x 15 x 35	6202658	52	54	26	34
35 x 18 x 35	6202669	52	54	26	34
35 x 22 x 35	6202671	52	55	26	34
35 x 28 x 35	6202680	52	57	26	34
42 x 22 x 42	6202691	60	58	30	37
42 x 28 x 42	6202702	60	60	30	37
42 x 35 x 42	6202713	60	63	30	37
54 x 22 x 54	6202724	71	64	36	43
54 x 28 x 54	6202735	71	66	36	43
54 x 35 x 54	6202746	71	69	36	43
54 x 42 x 54	6202757	71	73	36	43
66.7 x 28 x 66.7	6340345	99	73	49	50
66.7 x 35 x 66.7	6340356	99	76	49	50
66.7 x 42 x 66.7	6340367	99	80	49	50
66.7 x 54 x 66.7	6340378	99	85	49	50
76.1 x 22 x 76.1	6207047	115	68	60	47
76.1 x 28 x 76.1	6207058	115	85	60	62
76.1 x 35 x 76.1	6207069	115	87	60	61
76.1 x 42 x 76.1	6207071	115	97	60	67
76.1 x 54 x 76.1	6206475	115	110	60	75
76.1 x 66.7 x 76.1	6340389	115	104	60	54
88.9 x 22 x 88.9	6209654	130	76	67	55
88.9 x 28 x 88.9	6209665	130	92	67	69
88.9 x 35 x 88.9	6209676	130	97	67	71
88.9 x 42 x 88.9	6209687	130	105	67	75
88.9 x 54 x 88.9	6209698	130	117	67	82
88.9 x 66.7 x 88.9	6340391	130	111	67	61
88.9 x 76.1 x 88.9	6206486	130	117	67	62
108 x 22 x 108	6209711	155	85	78	64
108 x 28 x 108	6209720	155	102	78	79
108 x 35 x 108	6209731	155	107	78	81
108 x 42 x 108	6209742	155	115	78	85
108 x 54 x 108	6209753	155	128	78	93
108 x 76.1 x 108	6209764	155	128	78	73
108 x 88.9 x 108	6206497	155	137	78	82

C1416 tee reduced

(3 x press)



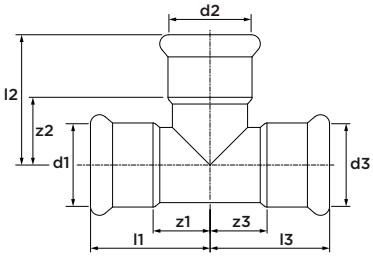

dimension	article no.	l1	l2	l3	z1	z2	z3
22 x 15 x 15	6206739	40	48	47	19	28	27
22 x 22 x 15	6206741	40	49	49	19	28	29

C1418 tee branch female

(press x female thread x press)



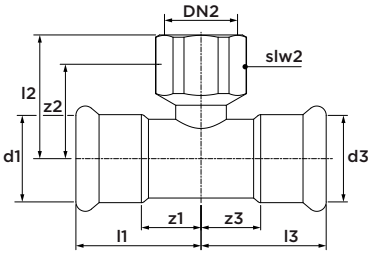

dimension	article no.	l1/l3	l2	z1/z3	z2	slw2
15 x Rp½" x 15	6202812	35	37	15	22	24
18 x Rp½" x 18	6202823	37	37	17	22	24
18 x Rp¾" x 18	6209841	37	40	17	24	30
22 x Rp½" x 22	6202834	40	39	19	24	24
22 x Rp¾" x 22	6206706	40	41	19	25	30
22 x Rp1" x 22	6341995	40	46	19	23	41
28 x Rp½" x 28	6202845	45	42	22	27	24
28 x Rp¾" x 28	6207181	45	44	22	28	30
28 x Rp1" x 28	6209601	45	48	22	25	41
35 x Rp½" x 35	6202856	52	46	26	31	24
35 x Rp¾" x 35	6207102	52	48	26	31	30
35 x Rp1" x 35	6209610	52	52	26	29	41
42 x Rp½" x 42	6202867	61	48	31	33	24
42 x Rp¾" x 42	6207113	61	50	31	34	30
42 x Rp1" x 42	6209621	61	54	31	31	41
54 x Rp½" x 54	6202878	71	54	36	39	24
54 x Rp¾" x 54	6207124	71	56	36	40	30
54 x Rp1" x 54	6207795	71	60	36	37	41
66.7 x Rp¾" x 66.7	6340400	99	67	49	51	30
76.1 x Rp¾" x 76.1	6206508	115	82	60	66	30
88.9 x Rp¾" x 88.9	6206519	130	84	67	68	30
108 x Rp¾" x 108	6206521	155	94	78	78	30

C1407 reducer

(male x press)



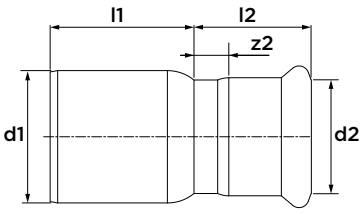

dimension	article no.	l1	l2	z2
Ø15 x 12	6202119	27	29	12
Ø18 x 12	6202121	29	27	10
Ø18 x 15	6202130	27	31	11
Ø22 x 12	6202141	33	27	10
Ø22 x 15	6202152	32	29	9
Ø22 x 18	6202163	29	32	12
Ø28 x 15	6202174	38	30	10
Ø28 x 18	6202185	36	30	10
Ø28 x 22	6202196	33	33	12
Ø35 x 22	6202207	41	30	9
Ø35 x 28	6202218	34	36	13
Ø42 x 22	6206651	51	32	11
Ø42 x 28	6206662	51	32	9
Ø42 x 35	6202229	41	39	13
Ø54 x 18	6206673	64	34	14
Ø54 x 22	6202231	63	34	13
Ø54 x 28	6202240	58	33	10
Ø54 x 35	6206684	57	38	12
Ø54 x 42	6202251	52	44	14
Ø66.7 x 28	6340213	96	41	18
Ø66.7 x 35	6340224	84	38	12
Ø66.7 x 42	6340235	81	44	14
Ø66.7 x 54	6340246	72	48	13
Ø76.1 x 42	6206387	97	50	20
Ø76.1 x 54	6206398	86	55	20
Ø76.1 x 66.7	6340257	75	64	14
Ø88.9 x 54	6206409	101	54	19
Ø88.9 x 66.7	6340268	92	65	15
Ø88.9 x 76.1	6206411	90	68	13
Ø108 x 66.7	6340279	122	65	15
Ø108 x 76.1	6206420	120	68	13
Ø108 x 88.9	6206431	110	77	14

C1405 straight connector

(press x male thread)



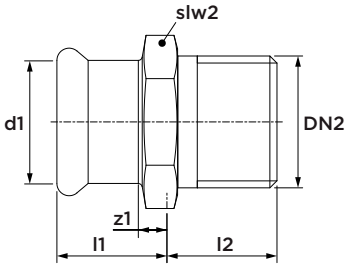

dimension	article no.	l1	l2	z1	slw2
12 x R⅜"	6202262	20	20	3	22
15 x R⅜"	6202273	22	13	2	24
15 x R½"	6202284	22	17	2	24
18 x R½"	6202295	22	17	2	27
18 x R¾"	6202306	22	18	2	27
22 x R½"	6206717	26	17	5	32
22 x R¾"	6202317	26	18	5	32
22 x R1"	6206728	28	22	7	34
28 x R¾"	6209852	28	22	5	38
28 x R1"	6202328	28	20	5	41
35 x R1"	6341247	33	20	7	46
35 x R1¼"	6202339	33	22	7	46
42 x R1½"	6202341	35	24	5	55
54 x R2"	6202350	41	28	6	70
66.7 x R2½"	6340422	57	33	7	85
76.1 x R2½"	6204781	64	33	9	80
88.9 x R3"	6204792	73	36	10	95

C1402 straight connector

(press x female thread)



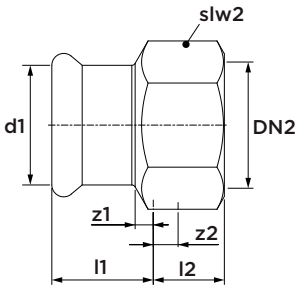

dimension	article no.	l1	l2	z1	z2	slw2
12 x Rp½"	6202361	20	19	3	4	24
15 x Rp½"	6202372	22	19	2	4	24
18 x Rp½"	6202383	21	19	1	4	27
18 x Rp¾"	6202394	23	20	3	4	30
22 x Rp½"	6340202	22	14	1	0	32
22 x Rp¾"	6202405	23	20	2	4	32
28 x Rp½"	6207806	24	14	1	1	41
28 x Rp¾"	6209830	24	17	1	0	38
28 x Rp1"	6202416	26	23	3	4	41
35 x Rp½"	6340917	30	12	4	1	46
35 x Rp¾"	6340928	28	15	2	3	46
35 x Rp1"	6340939	33	13	7	0	46
35 x Rp1¼"	6206695	28	22	2	7	46
42 x Rp1½"	6341192	32	22	2	6	54
54 x Rp2"	6341203	37	26	2	8	67

C1433 straight connector

(male x female thread)



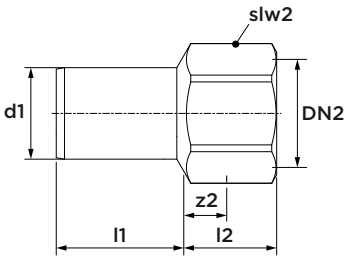

dimension	article no.	l1	l2	z2	slw2
Ø12 x Rp⅜"	6209874	25	17	6	19
Ø12 x Rp½"	6202427	25	24	9	24
Ø15 x Rp½"	6202438	28	23	8	24
Ø18 x Rp½"	6202449	28	22	7	24
Ø18 x Rp¾"	6202451	28	25	9	30
Ø22 x Rp½"	6202460	29	21	6	24
Ø22 x Rp¾"	6202471	29	24	8	30

when pressing, take care that the jaws do not interfere with the wrench flats!

C1404 straight connector

(press x eurocone)



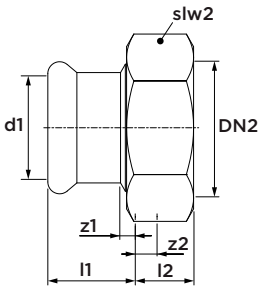

dimension	article no.	l1	l2	z1	z2	slw2
15 x ¾"	6208169	21	16	1	7	30
18 x ¾"	6208171	22	16	2	7	30

C1428 angle adapter 90°

(press x male thread)



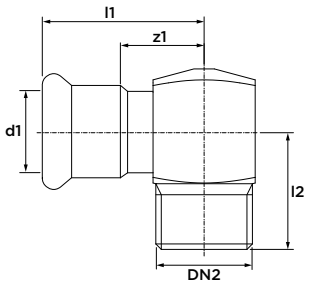

dimension	article no.	l1	l2	z1
12 x R⅜"	6202064	37	22	20
15 x R⅜"	6202075	40	22	20
15 x R½"	6202086	41	28	21
18 x R½"	6202097	42	28	22
22 x R¾"	6202108	45	32	24

C1409 angle adapter 90°

(press x female thread)



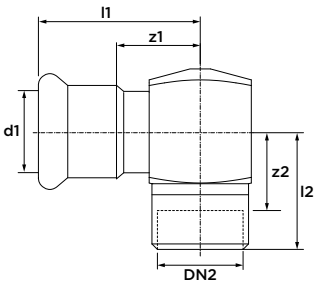

dimension	article no.	l1	l2	z1	z2
22 x Rp½"	6341038	45	31	24	16
28 x Rp½"	6341049	51	35	28	20
35 x Rp½"	6341051	57	35	31	20

C1430 bend 90°

(press x male thread)



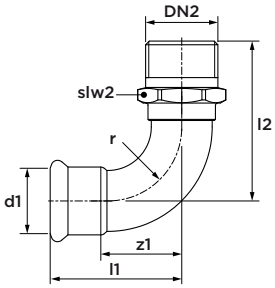

dimension	article no.	l1	z1	l2	slw2	r
12 x R⅜"	6201976	35	18	42	17	15
15 x R⅜"	6201987	41	21	45	19	18
15 x R½"	6201998	41	21	50	22	18
18 x R½"	6202009	45	25	54	22	22
22 x R¾"	6202011	51	30	62	30	27
28 x R1"	6202020	61	38	74	36	34
35 x R1¼"	6202031	72	46	86	46	42
42 x R1½"	6202042	87	57	96	50	51
54 x R2"	6202053	105	70	116	60	65

C1438 bend 90°

(press x female thread)



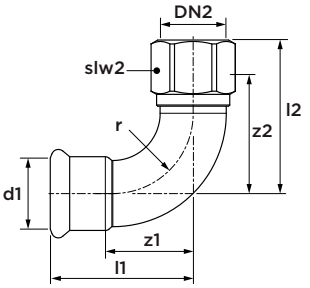

dimension	article no.	l1	l2	z1	z2	slw2	r
15 x Rp⅜"	6200931	41	42	21	31	19	18
15 x Rp½"	6200942	41	48	21	33	24	18
18 x Rp½"	6200953	45	52	25	37	24	22
22 x Rp½"	6209577	51	59	30	44	27	27
22 x Rp¾"	6200964	51	59	30	43	30	27
28 x Rp½"	6207025	61	65	38	50	32	34
28 x Rp¾"	6200986	61	65	38	49	32	34
28 x Rp1"	6209588	61	70	38	51	41	34
35 x Rp½"	6201063	72	75	46	55	41	42
35 x Rp¾"	6201074	72	75	46	54	41	42
35 x Rp1"	6209599	72	75	46	56	41	42

C1435 straight union
(press x male thread)



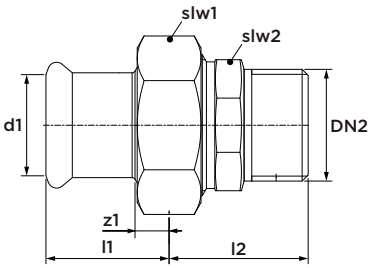

dimension	article no.	l1	z1	l2	slw1	slw2
15 x R½"	6207190	29	9	35	30	25
18 x R½"	6207036	29	9	35	30	25
22 x R¾"	6207201	30	9	40	36	32
28 x R1"	6207212	31	8	44	46	39
35 x R1¼"	6207223	34	8	48	52	49
42 x R1½"	6207234	41	11	47	58	51
54 x R2"	6207245	47	12	53	75	65

including flat seal

C1444 straight union
(press x female thread)



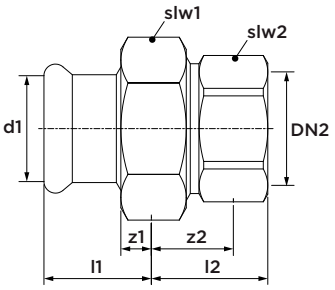

dimension	article no.	l1	l2	z1	z2	slw1	slw2
15 x Rp½"	6208906	29	30	9	15	30	27
18 x Rp½"	6208917	29	30	9	15	30	27
22 x Rp¾"	6208928	30	33	9	17	36	34
28 x Rp1"	6208939	31	34	8	15	46	42
35 x Rp1¼"	6208941	34	42	8	20	52	50
42 x Rp1½"	6208950	41	42	11	20	58	55
54 x Rp2"	6208961	47	46	12	20	75	70

including flat seal

C1431 venturi-insert



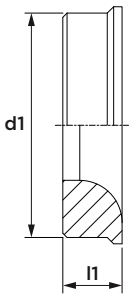

dimension	article no.	l1
Ø18	6202922	6
Ø22	6202933	7
Ø28	6202944	7

C1439 reducer
(2 x press)



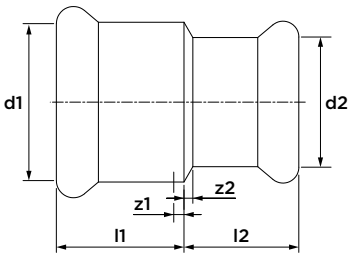

dimension	article no.	l1	l2	z1/z2
22 x 15	6201129	23	22	2
28 x 22	6201131	25	23	2

C1426 flanged connector PN 10/16

(1 x press)



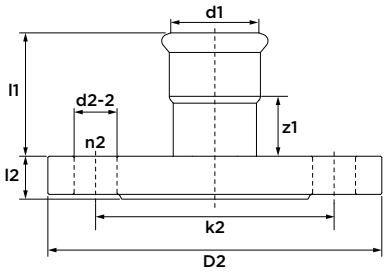

dimension	DN	article no.	l1	l2	z1	k2	D2	d2-2	n2
35	32	6341500	52	18	26	100	140	18	4
42	40	6341511	59	18	29	110	150	18	4
54	50	6341522	69	18	34	125	165	18	4
66.7	65	6340323	71	18	21	145	185	18	4
76.1	65	6206596	94	18	39	145	185	18	4
88.9	80	6206607	98	20	35	160	200	18	8
108	100	6206618	94	20	17	180	220	18	8

C1427 flanged connector PN6

(1 x press)



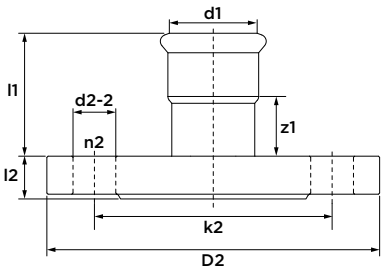

dimension	DN	article no.	l1	l2	z1	k2	D2	d2-2	n2
66.7	65	6207080	71	14	21	130	160	14	4
76.1	65	6206629	94	14	39	130	160	14	4
88.9	80	6206631	98	16	35	150	190	18	4
108	100	6206640	94	16	17	170	210	18	4

C1434 crossing 90°

(4 x press)



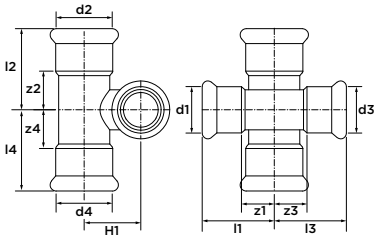

dimension	article no.	l1/l3	l2/l4	z1/z3	z2/z4	H1
15 x 15 x 15 x 15	6202889	35	35	15	15	21
18 x 15 x 18 x 15	6202891	37	35	17	15	23
22 x 15 x 22 x 15	6202900	40	35	19	15	25
22 x 18 x 22 x 18	6202911	40	37	19	17	26
28 x 15 x 28 x 15	6207135	45	35	22	15	28
28 x 18 x 28 x 18	6207146	45	37	22	17	29
28 x 22 x 28 x 22	6207157	45	40	22	19	31

C1429 stop end

(1 x press)



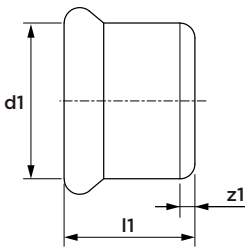

dimension	article no.	l1	z1
15	6202955	23	3
18	6202966	23	3
22	6202977	24	3
28	6202988	26	3
35	6202999	29	3
42	6203001	37	7
54	6203010	42	7
66.7	6340171	60	10
76.1	6206915	64	9
88.9	6206926	72	9
108	6206937	97	20

C1436 crossingpair double
(press x male)



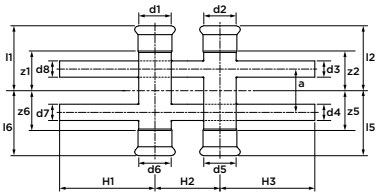

dimension	article no.	l1/l2/l5/l6	z1/z2/z5/z6	H1/H3	H2	a
12 x Ø12	6206750	50	33	100	60	40
15 x Ø12	6206761	60	40	100	60	40
15 x Ø15	6206772	60	40	100	60	40
18 x Ø12	6206783	60	40	100	60	40
18 x Ø15	6206794	60	40	100	60	40
22 x Ø12	6206948	60	39	100	60	40
22 x Ø15	6206805	60	39	100	60	40
28 x Ø12	6206816	60	37	100	60	40
28 x Ø15	6206827	60	37	100	60	40
35 x Ø15	6206838	60	34	100	60	40

C1437 crossingpair single
(press x male)



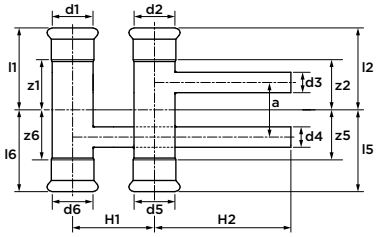

dimension	article no.	l1/l2/l5/l6	z1/z2/z5/z6	H1	H2	a
12 x Ø12	6206959	50	33	60	100	40
15 x Ø12	6206961	60	40	60	100	40
15 x Ø15	6206849	60	40	60	100	40
18 x Ø12	6206851	60	40	60	100	40
18 x Ø15	6206860	60	40	60	100	40
22 x Ø12	6206871	60	39	60	100	40
22 x Ø15	6206882	60	39	60	100	40
28 x Ø12	6206893	60	37	60	100	40
28 x Ø15	6206904	60	37	60	100	40

C1443 slip coupling
(press x female thread)



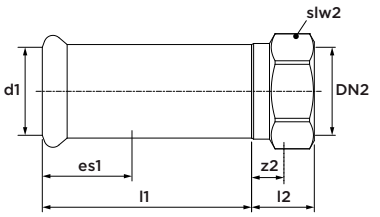

dimension	article no.	l1	l2	z2	es1	slw2
22 x Rp½"	6241312	92	22	15	21	28
22 x Rp¾"	6241323	97	27	17	21	32
28 x Rp½"	6241268	94	24	15	23	32
28 x Rp¾"	6241279	93	23	17	23	32

C1447 crossing 90°
(4 x press)



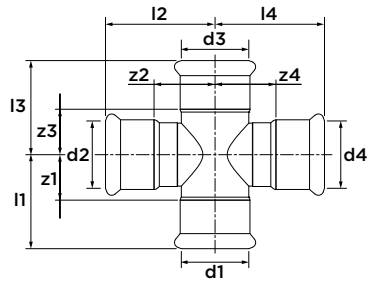

dimension	article no.	l1/l3	l2/l4	z1/z3	z2/z4
35	6340972	52	60	26	34
42	6340983	61	67	31	37
54	6340994	71	78	36	43
35 x 28 x 35 x 28	6341005	52	57	26	34
42 x 28 x 42 x 28	6341016	61	60	31	37
54 x 28 x 54 x 28	6341027	71	66	36	43

C1446 coupling with nut

(press x female thread)



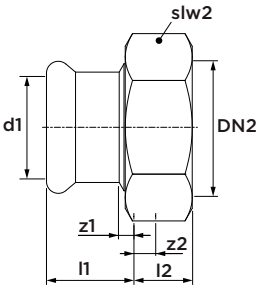

dimension	article no.	l1	l2	z1	z2	slw2
15 x G¾"	6340521	29	8	9	2	30
18 x G¾"	6340532	29	8	9	2	30
22 x G¾"	6342479	44	8	23	2	30
22 x G1"	6340554	30	10	9	2	36
28 x G5/4"	6340565	31	10	8	2	46
35 x G3/2"	6340576	34	11	8	2	52
42 x G1¾"	6340587	41	11	11	2	52
54 x G2⅜"	6340598	47	11	12	3	75

including flat seal

C1442 transition for grooved couplings

(press x groove)



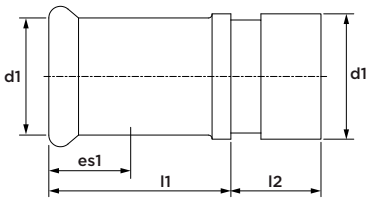

dimension	article no.	l1	l2	es1
28 x 33.7	6241301	49	24	23
35 x 42.4	6241345	54	24	26
42 x 48.3	6241356	61	24	30
54 x 60.3	6241367	73	24	35
76.1 x 73	6341181	68	24	50
76.1 x 76.1	6340774	66	24	55
88.9 x 88.9	6340785	76	24	63
108 x 114	6340796	84	26	77

C9441 transition to VSH PowerPress

(VSH PowerPress x VSH XPress)



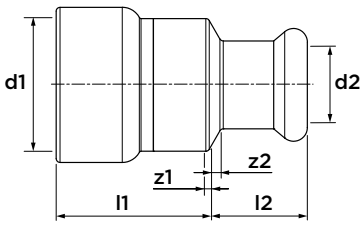

dimension	article no.	l1	l2	z1	z2
½" x 15	PWR9401216	30	22	1	2
¾" x 15	PWR9401238	32	23	1	2
1" x 15	PWR9401249	33	23	2	3
¾" x 22	PWR9401227	39	24	3	4
1" x 28	PWR9401251	38	25	1	2
1¼" x 35	PWR9401260	51	29	2	3
1½" x 42	PWR9401271	52	33	2	3
2" x 54	PWR9401282	56	38	2	3

K7227 transition to VSH MultiPress

(VSH MultiPress x VSH XPress)



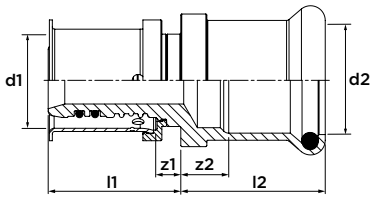

dimension	article no.	l1	l2	z1	z2
16 x 15	3824304	28	28	5	8
20 x 15	3824315	25	28	2	8
20 x 22	3824326	28	31	5	10
25 x 22	3824337	35	31	4	10

C1451 o-ring Leak Before Pressed (LBP)

(black, EPDM) for carbon steel and stainless steel



dimension	article no.
12	6222205
15	6222216
18	6222227
22	6222238
28	6222249
35	6222251
42	6222260
54	6222271

R2760 o-ring

(black, EPDM) for carbon steel and stainless steel



dimension	article no.
66.7	6208180
76.1	6208015
88.9	6208026
108	6208037

C1452 flat seal

(black, EPDM) for carbon steel and stainless steel



dimension	article no.
15-18	6228013
22	6228024
28	6228035
35	6228046
42	6228057
54	6228068

R2767 flat seal for special applications

(green, FPM) for carbon steel and stainless steel



dimension	article no.
15-18	6118301
22	6118310
28	6118321
35	6118332
42	6118343
54	6118354

R2764 o-ring (LBP) for special applications

(green, FPM) for carbon steel and stainless steel



dimension	article no.
15	6119401
18	6119410
22	6119421
28	6119432
35	6119443
42	6119454
54	6119465

R2761 o-ring (LBP) for special applications

(green, FPM) for carbon steel and stainless steel



dimension	article no.
76,1	6119377
88,9	6119388
108	6119399



VSH XPress

Copper

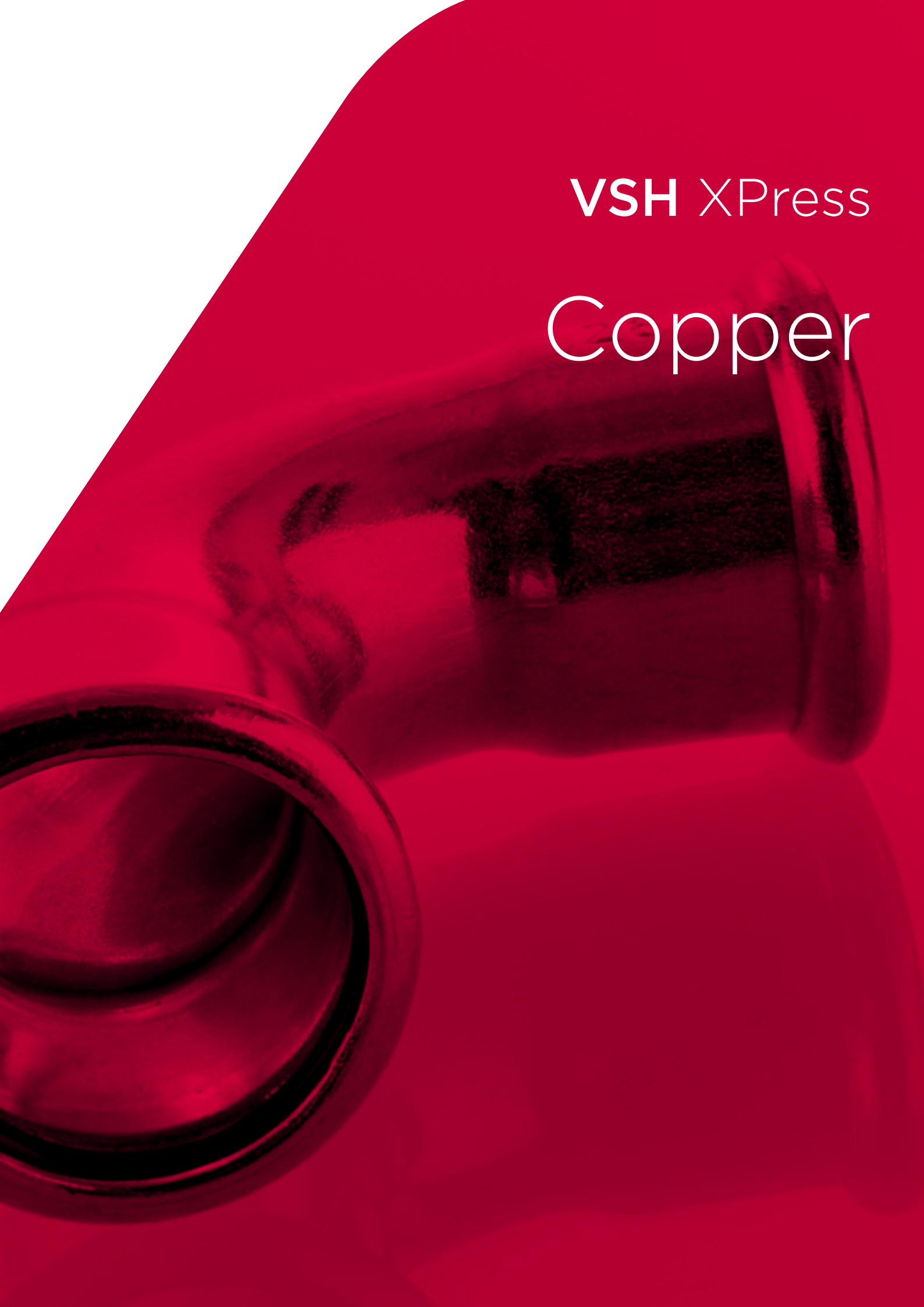

7270 straight coupling
(2 x press)



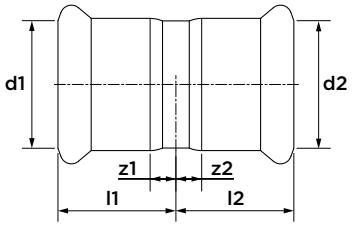

dimension	article no.	l1/l2	z1/z2
12	4800004	21	4
15	4800015	22	2
18	4800026	22	2
22	4800037	23	2
28	4800048	25	2
35	4800059	28	2
42	4800061	36	4
54	4800070	42	5
64	4806001	74	24
66.7	4800081	55	5
76.1	4800092	55	5
88.9	4800103	66	8
108	4800114	72	5

7270CP straight coupling chrome plated
(2 x press)



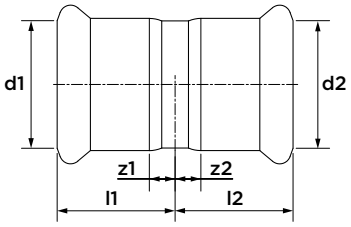

dimension	article no.	l1/l2	z1/z2
12	4809409	21	4
15	4809411	22	2
22	4809420	23	2

7270S slip coupling
(2 x press)



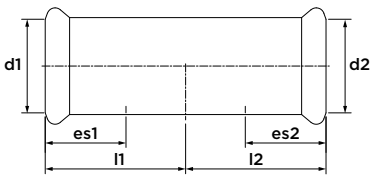

dimension	article no.	l1/l2	es1/es2
15	4800125	40	20
18	4800136	40	20
22	4800147	42	21
28	4800158	46	23
35	4800169	50	25
42	4800171	60	30
54	4800180	71	36
66.7	4806604	55	50
76.1	4800202	55	50
88.9	4800213	66	50
108	4800224	72	68

7270SCP slip coupling chrome plated
(2 x press)



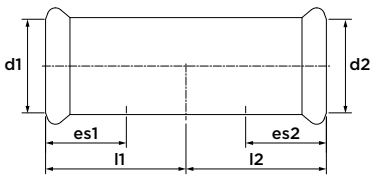

dimension	article no.	l1/l2	es1/es2
15	4809431	40	20

7002A bend 90°

(2 x press)



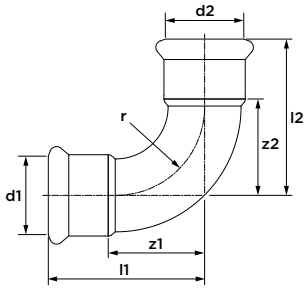

dimension	article no.	l1	l2	z1	z2	r
12	4800301	31	31	14	14	14
15	4800312	38	38	17	17	17
18	4800323	42	42	22	22	22
22	4800334	47	47	26	26	26
28	4800345	56	56	34	34	34
35	4800356	68	68	42	42	42
42	4800367	80	80	50	50	50
54	4800378	100	100	65	65	65
64	4806021	172	172	122	122	90
66.7	4800389	132	132	87	87	80
76.1	4800391	142	142	92	92	90
88.9	4800400	170	170	106	106	105
108	4800411	201	201	135	135	161

7002R bend 90° reduced

(2 x press)



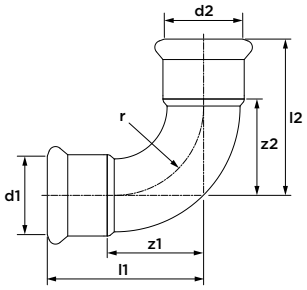

dimension	article no.	l1	l2	z1	z2	r
22 x 15	4804987	48	53	27	33	26

7002ACP bend 90° chrome plated

(2 x press)



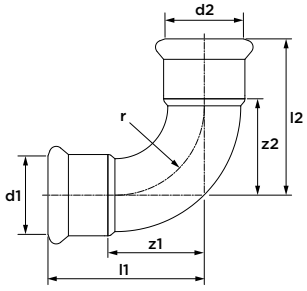

dimension	article no.	l1	l2	z1	z2	r
12	4809574	31	31	14	14	14
15	4809585	38	38	17	17	17
22	4809596	47	47	26	26	26

7001A bend 90°

(press x male)



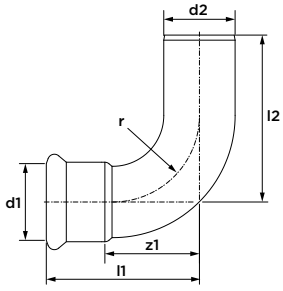

dimension	article no.	l1	l2	z1	r
12 x Ø12	4800422	31	45	14	14
15 x Ø15	4800433	36	50	16	18
18 x Ø18	4800444	42	53	22	22
22 x Ø22	4800455	47	58	27	26
28 x Ø28	4800466	58	64	34	34
35 x Ø35	4800477	69	82	44	42
42 x Ø42	4800488	81	101	52	50
54 x Ø54	4800499	100	120	66	65
66.7 x Ø66.7	4800501	130	175	78	80
76.1 x Ø76.1	4800510	143	150	93	90
88.9 x Ø88.9	4800521	170	178	112	106
108 x Ø108	4800532	197	208	130	161

7001ACP bend 90° chrome plated

(press x male)



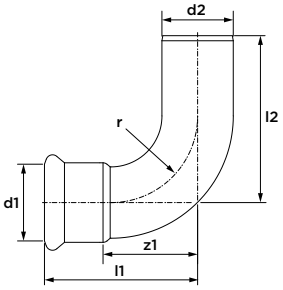

dimension	article no.	l1	l2	z1	r
12 x Ø12	4809607	31	45	14	14
15 x Ø15	4809618	36	50	16	18
22 x Ø22	4809629	47	58	27	26

7041 bend 45°

(2 x press)



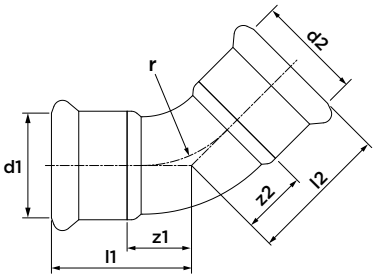

dimension	article no.	l1/l2	z1/z2	r
12	4800543	23	6	14
15	4800554	28	8	18
18	4800565	29	9	22
22	4800576	31	12	26
28	4800587	37	16	34
35	4800598	44	18	42
42	4800609	51	21	50
54	4800611	62	27	65
66.7	4800620	85	35	80
76.1	4800631	91	45	91
88.9	4800642	109	46	107
108	4800653	125	59	130

7041CP bend 45° chrome plated

(2 x press)



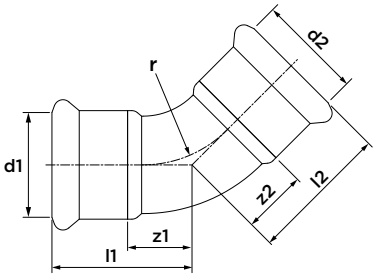

dimension	article no.	l1/l2	z1/z2	r
12	4809640	23	6	14
15	4809651	28	8	18

7040 bend 45°

(press x male)



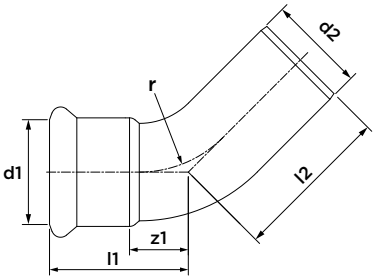

dimension	article no.	l1	l2	z1	r
12 x Ø12	4800664	23	32	6	14
15 x Ø15	4800675	28	37	8	18
18 x Ø18	4800686	29	39	9	22
22 x Ø22	4800697	32	44	11	26
28 x Ø28	4800708	37	47	14	34
35 x Ø35	4800719	43	58	17	42
42 x Ø42	4800721	51	71	21	50
54 x Ø54	4800730	62	82	27	65
66.7 x Ø66.7	4800741	85	88	35	80
76.1 x Ø76.1	4800752	90	97	40	91
88.9 x Ø88.9	4800763	109	116	47	107
108 x Ø108	4800774	115	136	50	130

7040CP bend 45° chrome plated

(press x male)



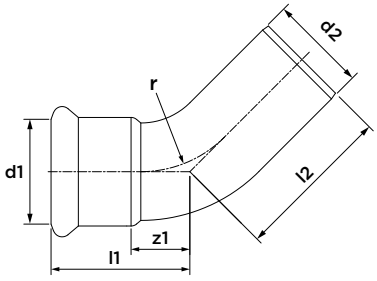

dimension	article no.	l1	l2	z1	r
12 x Ø12	4809662	23	32	6	14
15 x Ø15	4809673	28	37	8	18

7005 bend 90°

(2 x male)



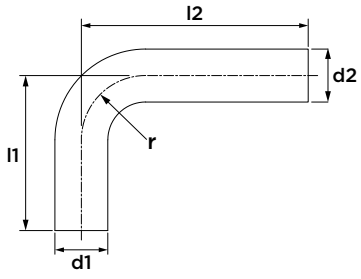

dimension	article no.	l1	l2	r
Ø15	4805504	70	120	18
Ø18	4805515	70	120	22
Ø22	4805526	70	120	27
Ø28	4805537	80	120	34

7087 crossover

(2 x male)



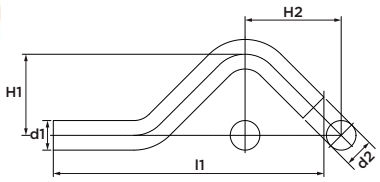

dimension	article no.	l1	H1	H2
Ø15	4800785	115	33	41
Ø18	4800796	124	35	44
Ø22	4800807	138	39	50

7086 crossover

(press x male)



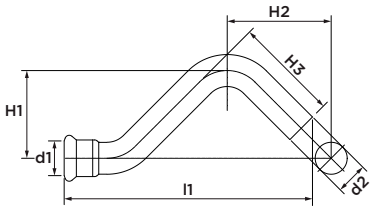

dimension	article no.	l1	H1	H2	H3
15 x Ø15	4800840	110	25	40	44
18 x Ø18	4800851	120	27	45	49
22 x Ø22	4800862	134	30	50	55

7086CP crossover chrome plated
(press x male)



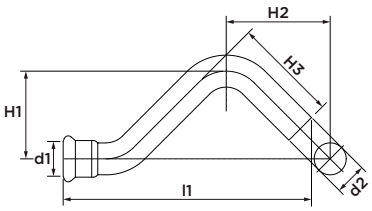

dimension	article no.	l1	H1	H2	H3
15 x Ø15	4809684	110	25	40	44

7085 crossover
(2 x press)



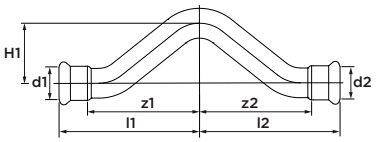

dimension	article no.	l1/l2	z1/z2	H1
15	4800818	70	50	26
18	4800829	76	56	27
22	4800831	85	64	28

7130 tee
(3 x press)



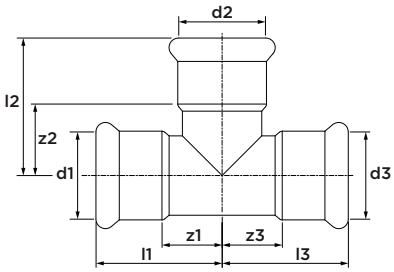

dimension	article no.	l1/l3	l2	z1/z3	z2
12	4801599	28	28	11	11
15	4801601	32	32	12	12
18	4801610	34	34	14	14
22	4801621	37	37	16	16
28	4801632	42	42	19	19
35	4801643	50	50	24	24
42	4801654	58	58	28	28
54	4801665	69	69	34	34
64	4806087	133	134	83	84
66.7	4801676	95	111	45	62
76.1	4801687	101	119	51	69
88.9	4801698	162	162	100	100
108	4801709	159	159	92	92

7130CP tee chrome plated
(3 x press)



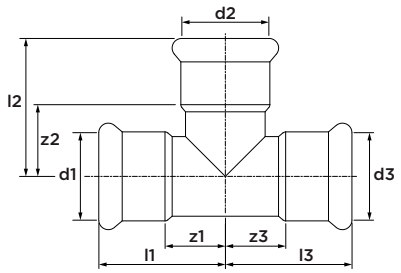

dimension	article no.	l1/l3	l2	z1/z3	z2
12	4809695	28	28	11	11
15	4809706	32	32	12	12
22	4809717	37	37	16	16

7125 tee reduced

(3 x press)



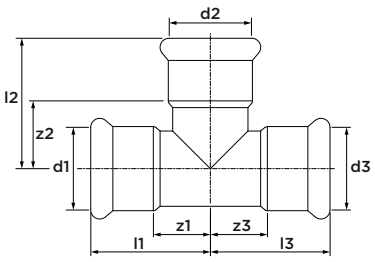

dimension	article no.	l1/l3	l2	z1/z3	z2
15 x 12 x 15	4801720	32	32	12	15
18 x 12 x 18	4801764	34	35	14	15
18 x 15 x 18	4801786	34	35	14	15
22 x 12 x 22	4805671	37	34	16	17
22 x 15 x 22	4801821	37	38	16	18
22 x 18 x 22	4801852	37	38	16	18
28 x 12 x 28	4805713	42	37	19	20
28 x 15 x 28	4801885	42	41	19	21
28 x 18 x 28	4801907	42	41	19	21
28 x 22 x 28	4801929	42	41	19	20
35 x 15 x 35	4801940	45	44	19	24
35 x 22 x 35	4801951	45	45	19	24
35 x 28 x 35	4801962	50	44	24	21
42 x 15 x 42	4801973	50	48	20	28
42 x 22 x 42	4801984	50	48	20	27
42 x 28 x 42	4801995	56	49	26	26
42 x 35 x 42	4802006	56	50	26	24
54 x 22 x 54	4802017	60	54	25	33
54 x 28 x 54	4802028	60	55	25	32
54 x 35 x 54	4802039	61	55	24	29
54 x 42 x 54	4802041	69	64	34	34
66.7 x 28 x 66.7	4806197	76	67	26	43
66.7 x 35 x 66.7	4805361	80	70	29	43
66.7 x 42 x 66.7	4805350	82	76	32	41
66.7 x 54 x 66.7	4805341	88	78	47	43
76.1 x 22 x 76.1	4805372	73	73	22	50
76.1 x 28 x 76.1	4805383	77	73	26	50
76.1 x 35 x 76.1	4802061	80	78	30	53
76.1 x 42 x 76.1	4802072	103	106	55	70
76.1 x 54 x 76.1	4802083	93	85	41	50
88.9 x 54 x 88.9	4802105	136	119	77	77
88.9 x 76.1 x 88.9	4802116	151	146	91	96
108 x 54 x 108	4802127	127	122	63	87
108 x 66.7 x 108	4805394	117	141	46	96

7125CP tee reduced chrome plated

(3 x press)



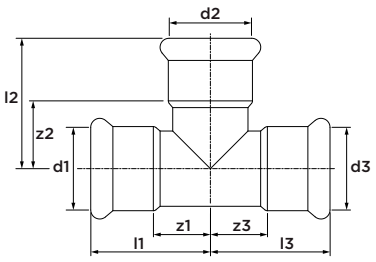

dimension	article no.	l1/l3	l2	z1/z3	z2
15 x 12 x 15	4809728	32	32	12	15
22 x 15 x 22	4809739	37	38	16	18

7126 tee reduced
(3 x press)



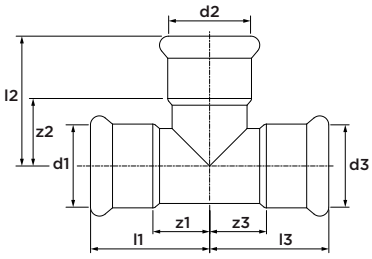

dimension	article no.	l1/l2	l3	z1/z2	z3
15 x 15 x 12	4801731	32	36	12	19
18 x 18 x 15	4801797	34	42	14	22
22 x 22 x 15	4801863	37	46	16	26
22 x 22 x 18	4801874	37	43	16	23
28 x 28 x 15	4805405	42	55	19	35
28 x 28 x 22	4801931	42	52	19	31
28 x 35 x 28	4800191	42	50	26	24
35 x 35 x 22	4805416	51	72	25	51
35 x 35 x 28	4805427	51	67	25	41

7126CP tee reduced chrome plated
(3 x press)



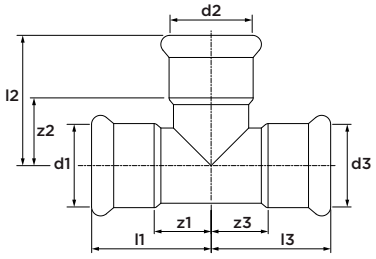

dimension	article no.	l1/l2	l3	z1/z2	z3
15 x 15 x 12	4809741	32	36	12	19

7127 tee reduced
(3 x press)



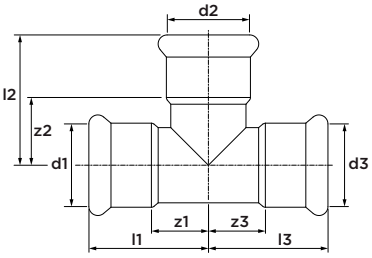

dimension	article no.	l1	l2	l3	z1	z2	z3
15 x 12 x 12	4801711	32	32	32	12	15	15
18 x 15 x 15	4801775	34	35	40	14	15	20
22 x 15 x 15	4801808	37	44	43	16	18	23
22 x 15 x 18	4801819	37	44	34	16	18	14
22 x 18 x 15	4801830	37	38	44	16	18	24
22 x 18 x 18	4801841	37	38	41	16	18	21
28 x 15 x 22	4805438	42	41	46	19	21	25
28 x 18 x 22	4801896	42	41	47	19	21	26
28 x 22 x 22	4801918	42	41	49	19	20	28
35 x 22 x 22	4805449	51	44	67	25	23	45
35 x 22 x 28	4805451	51	44	63	25	23	40
35 x 28 x 28	4805460	51	44	67	25	21	44
42 x 35 x 35	4805471	56	50	74	26	24	48
54 x 42 x 42	4805680	69	64	83	34	34	53

7127CP tee reduced chrome plated
(3 x press)



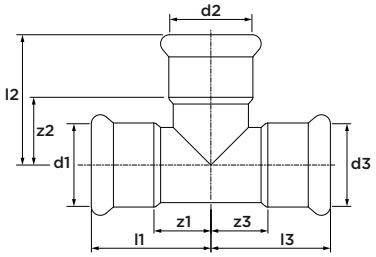

Abmessung	Artikel-Nr.	l1	l2	l3	z1	z2	z3
15 x 12 x 12	4809750	32	32	32	12	15	15

7128 tee reduced

(3 x press)



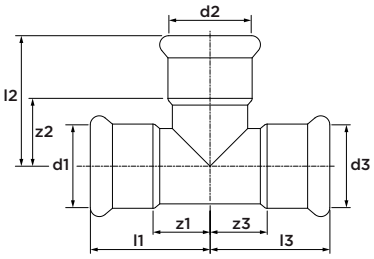

dimension	article no.	l1	l2	l3	z1	z2	z3
12 x 15 x 12	4805669	36	32	36	19	15	19
15 x 18 x 15	4801742	35	32	35	15	12	15
15 x 22 x 15	4801753	38	34	39	18	13	18
22 x 28 x 22	4802050	52	42	52	31	19	31
28 x 35 x 28	4800191	68	50	68	45	24	45

6130G tee

(press x female thread x press)



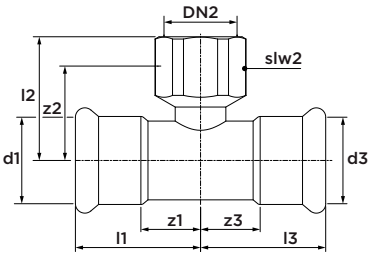

dimension	article no.	l1/l3	l2	z1/z3	z2	slw2
12 x Rp½" x 12	4802151	34	26	14	10	26
15 x Rp½" x 15	4802160	34	25	14	13	26
18 x Rp½" x 18	4802171	42	24	22	8	26
22 x Rp½" x 22	4802182	42	26	21	11	26
22 x Rp¾" x 22	4802193	45	27	24	11	32
28 x Rp½" x 28	4802204	44	29	21	14	26
28 x Rp¾" x 28	4802215	42	35	19	14	32
35 x Rp½" x 35	4802226	50	34	24	19	26
42 x Rp½" x 42	4802237	57	38	27	23	26
54 x Rp½" x 54	4802248	69	44	34	29	26
76.1 x Rp½" x 76.1	4805482	65	48	15	30	-
108 x Rp½" x 108	4805493	82	65	15	53	-

6130GCP tee chrome plated

(press x female thread x press)



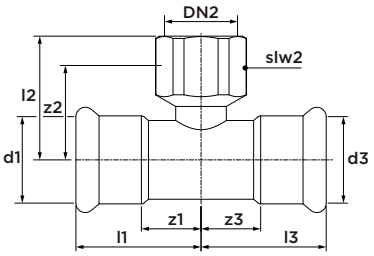

dimension	article no.	l1/l3	l2	z1/z3	z2	slw2
15 x Rp½" x 15	4809761	34	25	14	13	26

7243 reducer
(male x press)



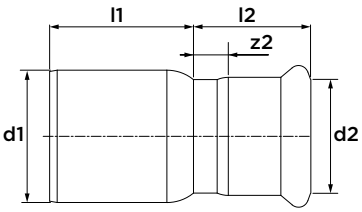

dimension	article no.	l1	l2	z2
Ø15 x 12	4802259	23	21	4
Ø22 x 15	4802281	28	24	4
Ø22 x 18	4802292	26	24	4
Ø28 x 15	4802303	37	25	4
Ø28 x 18	4802314	35	26	4
Ø28 x 22	4802325	30	25	4
Ø35 x 22	4802336	39	29	9
Ø35 x 28	4802347	35	28	5
Ø42 x 22	4802358	49	25	4
Ø42 x 28	4802369	44	27	4
Ø42 x 35	4802371	38	35	8
Ø54 x 28	4802380	59	27	4
Ø54 x 35	4802391	53	35	9
Ø54 x 42	4802402	47	40	9
Ø66.7 x 42	4802435	67	43	13
Ø66.7 x 54	4802446	65	39	4
Ø76.1 x 35	4802457	74	39	13
Ø76.1 x 42	4802468	70	43	13
Ø76.1 x 54	4802479	64	52	17
Ø76.1 x 66.7	4802481	60	66	16
Ø88.9 x 42	4802490	89	46	16
Ø88.9 x 54	4802501	84	48	13
Ø88.9 x 76.1	4802512	75	65	15
Ø108 x 42	4802523	106	47	17
Ø108 x 54	4802534	102	54	20
Ø108 x 76.1	4802556	92	70	20
Ø108 x 88.9	4802567	84	82	20

7243CP reducer chrome plated
(male x press)



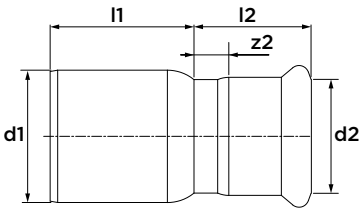

dimension	article no.	l1	l2	z2
Ø15 x 12	4809541	23	21	4
Ø22 x 15	4809552	28	24	4

7240 reducer
(2 x press)



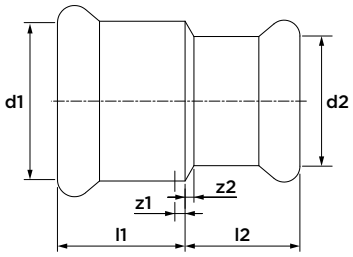

dimension	article no.	l1	l2	z1	z2
15 x 12	4805581	23	22	3	5
22 x 15	4805592	28	25	7	5
28 x 15	4805647	35	23	12	3
28 x 22	4805603	29	26	6	5
35 x 28	4805614	33	28	7	5
42 x 35	4805625	37	31	7	5
54 x 42	4805636	46	34	11	4

7240CP reducer chrome plated
(2 x press)



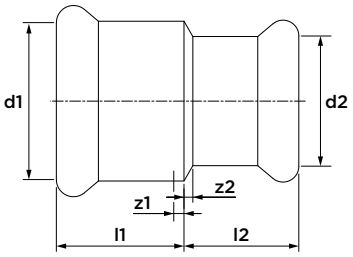

dimension	article no.	l1	l2	z1	z2
15 x 12	4809442	23	22	3	5
22 x 15	4809453	28	25	7	5

6270G straight connector
(press x female thread)



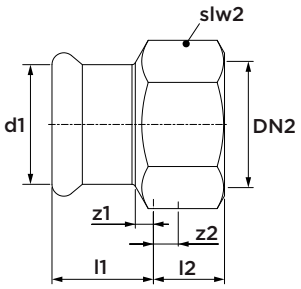

dimension	article no.	l1	l2	z1	z2	slw2
12 x Rp⅜"	4801269	17	14	0	6	20
12 x Rp½"	4801271	18	17	0	8	22
15 x Rp⅜"	4801280	20	14	2	6	20
15 x Rp½"	4801291	20	18	3	8	25
15 x Rp¾"	4801302	21	19	5	8	30
18 x Rp½"	4801313	19	18	2	8	25
18 x Rp¾"	4801324	20	19	2	9	30
22 x Rp½"	4801335	20	17	1	7	30
22 x Rp¾"	4801346	20	19	0	9	30
22 x Rp1"	4801357	21	22	3	11	37
28 x Rp¾"	4801368	23	17	3	7	37
28 x Rp1"	4801379	23	22	3	10	37
28 x Rp1¼"	4801381	24	24	2	10	46
35 x Rp¾"	4805691	29	15	4	4	30
35 x Rp1"	4801390	24	22	5	10	42
35 x Rp1¼"	4801401	25	25	3	11	46
42 x Rp1¼"	4801412	30	22	0	8	46
42 x Rp1½"	4801423	29	25	3	11	48
54 x Rp2"	4801434	34	25	3	11	48
64 x Rp2½"	4806076	49	40	1	9	82

6270GCP straight connector chrome plated
(press x female thread)



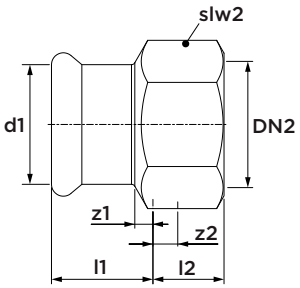

dimension	article no.	l1	l2	z1	z2	slw2
12 x Rp⅜"	4809464	17	14	0	6	20
12 x Rp½"	4809475	18	17	0	8	22
15 x Rp⅜"	4809486	20	14	2	6	20
15 x Rp½	4809497	20	18	3	8	25

6243G straight connector

(press x male thread)



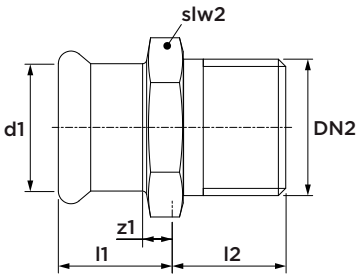

dimension	article no.	l1	l2	z1	slw2
12 x R⅜"	4801038	21	12	4	19
12 x R½"	4801049	21	15	4	19
15 x R⅜"	4801051	21	12	1	21
15 x R½"	4801060	22	15	2	21
15 x R¾"	4801071	23	16	3	25
18 x R½"	4801082	22	15	2	25
18 x R¾"	4801093	23	16	3	25
22 x R½"	4801104	26	15	5	30
22 x R¾"	4801115	26	16	5	30
22 x R1"	4801126	26	18	5	32
28 x R¾"	4801137	27	16	4	36
28 x R1"	4801148	27	18	4	36
28 x R1¼"	4801159	27	21	4	36
35 x R1"	4801161	30	18	4	41
35 x R1¼"	4801170	29	21	3	41
42 x R1¼"	4801181	37	21	7	51
42 x R1½"	4801192	37	21	7	51
54 x R2"	4801203	39	24	4	57
64 x R2½"	4806065	53	48	3	66
66.7 x R2½"	4801214	53	40	3	74
76.1 x R2½"	4801225	55	43	5	76
76.1 x R3"	4801236	55	55	5	77
88.9 x R3"	4801247	66	48	4	100
108 x R4"	4801258	71	60	3	107

6243GCP straight connector chrome plated

(press x male thread)



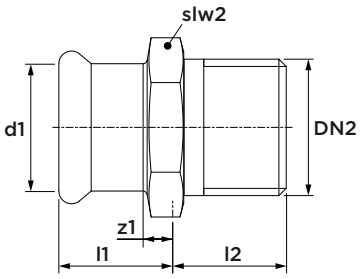

dimension	article no.	l1	l2	z1	slw2
12 x R⅜"	4809508	21	12	4	19
12 x R½"	4809519	21	15	4	19
15 x R⅜"	4809521	21	12	1	21
15 x R½"	4809530	22	15	2	21

6246G straight connector

(male x female thread)



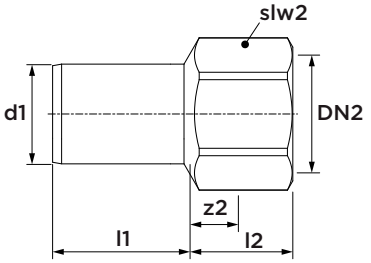

dimension	article no.	l1	l2	z2	slw2
15 x Rp½"	4803117	30	18	3	22
18 x Rp½"	4803128	30	17	3	22
18 x Rp¾"	4803139	30	20	3	30
22 x Rp½"	4803141	30	17	2	22
22 x Rp¾"	4803150	30	19	3	30
28 x Rp¾"	4803161	32	18	2	30
28 x Rp1"	4803172	32	22	3	37
35 x Rp1"	4803183	35	21	2	37
35 x Rp1¼"	4803194	35	25	4	46
42 x Rp1½"	4803205	51	25	4	48
54 x Rp2"	4803216	56	30	4	65

when pressing, take care that the jaws do not interfere with the wrench flats!

6280G straight connector
(male x male thread)



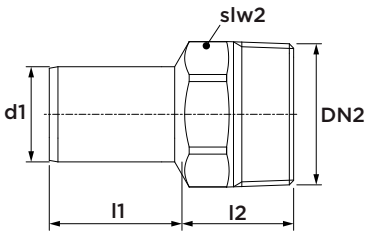

dimension	article no.	l1	l2	slw2
15 x R½"	4803251	30	21	19
18 x R½"	4803260	30	20	19
18 x R¾"	4803271	30	23	25
22 x R½"	4803282	30	21	25
22 x R¾"	4803293	30	23	25
28 x R1"	4803304	32	26	32
35 x R1¼"	4803315	35	29	36
42 x R1½"	4803326	51	29	46

when pressing, take care that the jaws do not interfere with the wrench flats!

6280GCP straight connector chrome plated
(male x male thread)



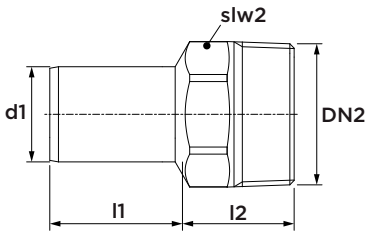

dimension	article no.	l1	l2	slw2
15 x R½"	4809563	30	21	19

when pressing, take care that the jaws do not interfere with the wrench flats!

6092G angle adapter 90°
(press x male thread)



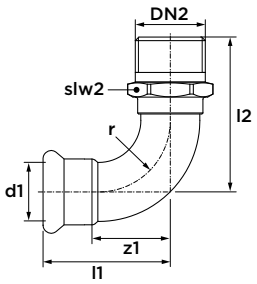

dimension	article no.	l1	z1	l2	slw2	r
12 x R½"*	4800939	40	23	18	26	14
15 x R⅜"	4800941	43	12	18	18	18
15 x R½"	4800950	38	19	26	18	18
18 x R½"	4800961	42	15	29	18	22
18 x R¾"*	4800972	47	18	32	25	22
22 x R¾"	4800983	47	28	34	25	26
28 x R1"	4800994	58	36	43	33	34
35 x R1¼"	4801005	55	30	34	40	42
42 x R1½"	4801016	62	32	38	50	50
54 x R2"	4801027	70	35	47	60	65

*composed of 2 parts

6092GCP angle adapter 90° chrome plated
(press x male thread)



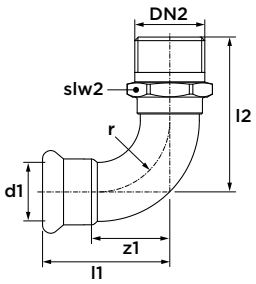

dimension	article no.	l1	z1	l2	slw2	r
15 x R½"	4809631	38	19	26	18	18

6359 coupling with nut

(press x female thread)



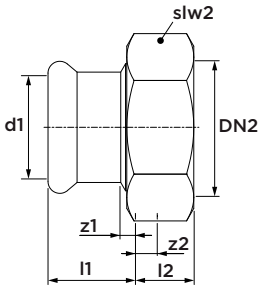

dimension	article no.	l1	l2	z1	z2	slw2
15 x G¾"	4800235	30	11	10	3	30
18 x G¾"	4800246	28	11	8	3	30
22 x G1"	4800257	36	13	15	3	36
28 x G1¼"	4800268	36	14	13	4	46
35 x G1½"	4800279	36	15	10	4	52
42 x G1¾"	4800281	44	17	14	4	58
54 x G2⅜"	4800290	52	11	17	4	75

including flat seal

6359CP coupling with nut chrome plated

(press x female thread)



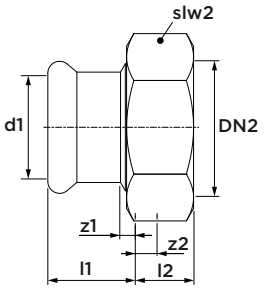

dimension	article no.	l1	l2	z1	z2	slw2
15 x G¾"	4809783	30	11	10	3	30

including flat seal

6090G angle adapter 90°

(press x female thread)



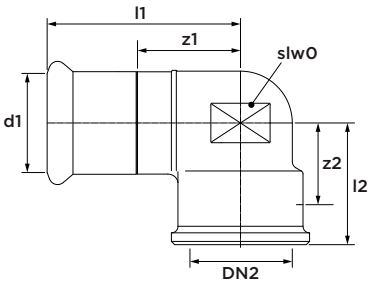

dimension	article no.	l1	l2	z1	z2	slw0
12 x Rp⅜"	4801478	39	18	22	10	15
12 x Rp½"*	4801489	39	20	22	7	26
15 x Rp⅜"	4801491	43	18	23	11	18
15 x Rp½"	4801500	41	23	21	12	18
15 x Rp¾"	4805570	36	29	16	13	31
18 x Rp½"	4801511	41	24	21	14	21
18 x Rp¾"*	4801522	52	25	32	12	21
22 x Rp½"	4801533	37	32	16	13	25
22 x Rp¾"	4801544	45	27	24	11	25
28 x Rp1"	4801555	51	33	28	14	33
35 x Rp1¼"	4801566	55	45	29	21	46
42 x Rp1½"	4801577	63	52	35	26	53
54 x Rp2"	4801588	74	60	42	33	65

*composed of 2 parts

6096G angle adapter 90°

(press x female thread)



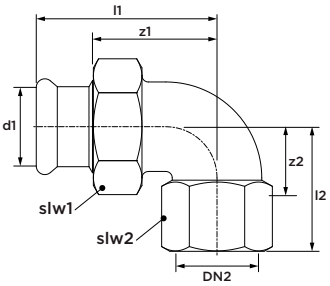

dimension	article no.	l1	l2	z1	z2	slw1	slw2
12 x Rp½"	4802831	49	32	32	15	30	27
15 x Rp½"	4802842	53	32	33	17	30	27
18 x Rp½"	4802853	55	32	35	17	30	27
18 x Rp¾"	4802864	61	36	41	20	36	33
22 x Rp¾"	4802875	66	40	45	21	36	40
22 x Rp1"	4802886	62	36	41	20	36	33
28 x Rp1"	4802897	68	44	45	25	46	40

including flat seal

6330 straight union
(2 x press)



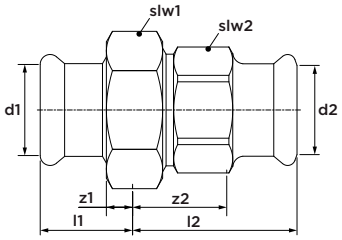

dimension	article no.	l1	l2	z1	z2	slw1	slw2
15	4803348	27	33	7	13	30	25
18	4803359	29	33	9	13	30	25
22	4803361	31	37	10	16	36	32
28	4803370	33	41	10	17	46	40
35	4803381	33	38	7	14	52	46
42	4803392	41	50	11	20	58	51
54	4803403	48	51	13	16	75	65

including flat seal

6330G straight union
(press x female thread)



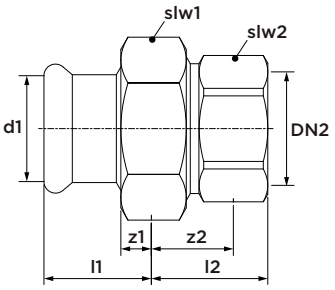

dimension	article no.	l1	l2	z1	z2	slw1	slw2
12 x Rp½"	4802721	22	20	5	5	27	26
15 x Rp½"	4802732	30	22	10	7	30	26
15 x Rp¾"	4802743	25	30	5	13	30	32
18 x Rp½"	4802754	28	20	8	5	30	26
18 x Rp¾"	4802765	28	29	8	13	30	32
22 x Rp¾"	4802776	36	32	14	15	36	39
22 x Rp1"	4802787	29	36	8	17	36	32
28 x Rp¾"	4805559	36	32	13	16	46	32
28 x Rp1"	4802798	36	29	13	10	46	43
35 x Rp1¼"	4802809	36	38	9	17	52	48
42 x Rp1½"	4802811	44	39	14	18	58	54
54 x Rp2"	4802820	52	38	17	12	75	65

including flat seal

6331G straight union
(press x male thread)



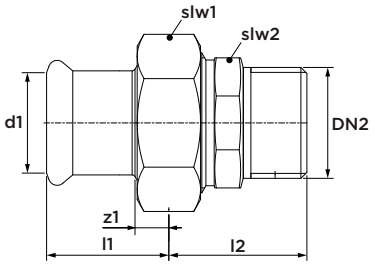

dimension	article no.	l1	z1	z2	slw1	slw2
12 x R⅜"	4802578	21	3	21	24	19
12 x R½"	4802589	22	5	23	27	25
15 x R½"	4802591	30	10	24	30	25
15 x R¾"	4802600	25	5	23	30	25
18 x R½"	4802611	28	8	23	30	25
18 x R¾"	4802622	28	8	24	30	25
22 x R½"	4802633	29	8	28	36	32
22 x R¾"	4802644	36	15	28	36	32
22 x R1"	4802655	29	8	28	36	32
28 x R¾"	4805561	36	13	30	46	40
28 x R1"	4802666	36	13	30	46	40
35 x R1¼"	4802677	36	10	24	52	46
42 x R1½"	4802688	44	14	31	58	51
54 x R2"	4802699	52	17	33	75	65

including flat seal

6490 double wallplate
(press x female thread)



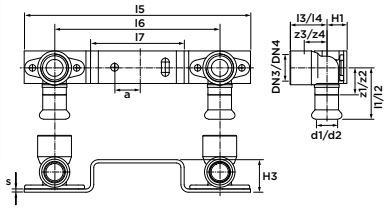

dimension	article no.	l1/ l2	l3/ l4	z1/ z2	z3/ z4	l5	l6	l7	H1	H3	s	a
12 x Rp⅜"	4807506	63	31	46	10	170	120	72	14	21	3	25
15 x Rp½"	4807517	42	20	22	9	203	153	88	19	25	3	25

6472G wallplate 90°

(press x female thread)



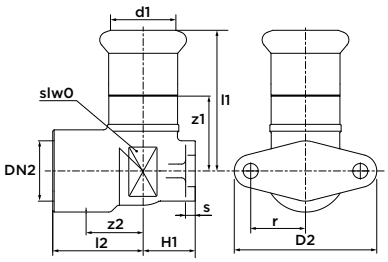

dimension	article no.	l1	l2	z1	z2	H1	slw0	D2	s	r
12 x Rp½"	4800873	63	25	46	10	10	15	47	3	17
15 x Rp½"	4800884	42	20	22	9	15	18	52	3	20
18 x Rp½"	4800895	43	24	23	9	15	25	52	3	20
22 x Rp¾"	4800906	45	27	24	11	18	18	52	3	20

6472L wallplate 90° long

(press x female thread)



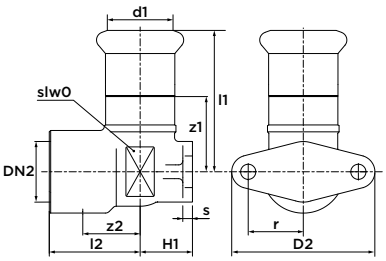

dimension	article no.	l1	l2	z1	z2	H1	slw0	D2	s	r
15 x Rp½"	4800917	47	48	27	8	10	18	52	3	20

6472 wallplate u-type, looped

(2x press)



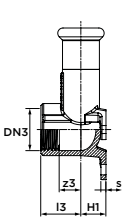

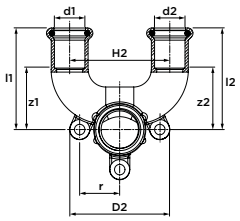

dimension	article no.	l1	l2	l3	z1	z2	z3	H1	D2	s	r
15 x Rp½	123459706	51	51	20	30	30	11	...	...	...	...
22 x Rp½	123459707	55	55	24	34	34	14	...	...	...	...

7510 flanged connector PN 10/16

(1 x press)



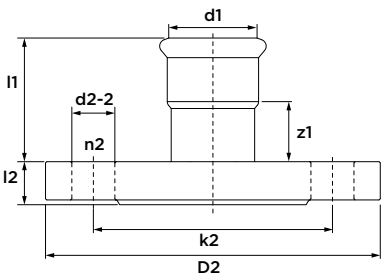

dimension	DN	article no.	l1	l2	z1	k2	D2	d2-2	n2
66.7	65	4806373	84	19	34	145	185	18	4
76.1	65	4806441	84	19	34	145	185	18	4
76.1	80	4806384	84	19	34	160	200	18	8
88.9	80	4806395	92	21	30	160	200	18	8
108	100	4806406	103	23	36	180	220	18	8

7520 flanged connector PN 10/16

(1 x male)



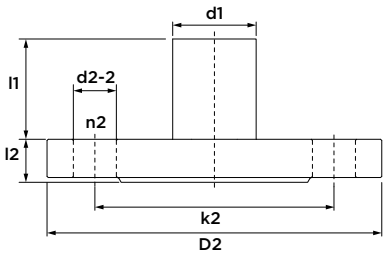

dimension	DN	article no.	l1	l2	k2	D2	d2-2	n2
66.7	65	4806428	93	19	145	185	18	4
76.1	80	4806439	94	19	160	200	18	8
108	100	4806516	118	23	180	220	18	8

7301 stop end

(1 x press)



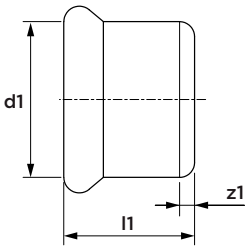

dimension	article no.	l1	z1
12	4805702	17	2
15	4802941	20	2
18	4802952	20	2
22	4802963	21	2
28	4802974	23	2
35	4802985	26	2
42	4802996	30	2
54	4803007	35	2
66.7	4806340	50	2
76.1	4803029	50	2
88.9	4806351	64	2
108	4803040	67	2

7301CP stop end chrome plated

(1 x press)



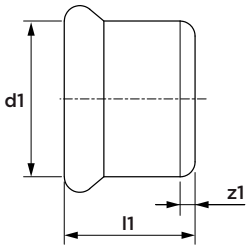

dimension	article no.	l1	z1
15	4809772	20	2

6131G multi-port coupling

(2 x press, 2-4 female thread)



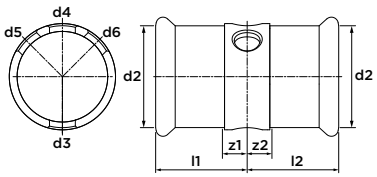

dimension	article no.	l1/l2	z1/z2	d1	d2	d3	d4	d5	d6
66.7 x Rp½"	4803051	65	15	66.7	66.7	½"	½"	-	-
76.1 x Rp½"	4803062	65	14	76.1	76.1	½"	½"	-	-
88.9 x Rp¾"	4803073	80	18	88.9	88.9	¾"	¾"	¾"	-
108 x Rp¾"	4803084	85	18	108	108	¾"	¾"	¾"	¾"

S1283 Insert for Wicu tube

(male)



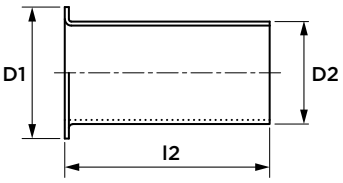

dimension	article no.	l2	D1	D2
15 x 1.0	0883245	23	15	12.5
18 x 1.0	0883278	25	18	15.8
22 x 1.0	0883291	27	22	19.8

7999 o-ring

(black, EPDM) for copper



dimension	article no.
12	6115901
15	6115912
18	6115923
22	6115934
28	6115945
35	6115956
42	6115967
54	6115978
64	4805064
66.7	4806527
76.1	4805075
88.9	4805086
108	4805097

C1700 o-ring for special applications

(green, FPM) for copper



dimension	article no.
12	4805207
15	4805218
18	4805229
22	4805231
28	4805240
35	4805251
42	4805262
54	4805273



VSH XPress

Copper Gas



G7270 straight coupling
(2 x press)



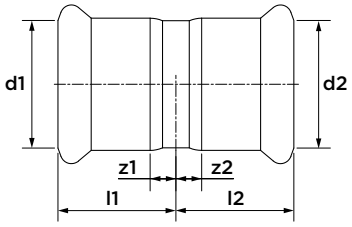

dimension	article no.	l1/l2	z1/z2
15	4804437	22	2
18	4804448	22	2
22	4804459	23	2
28	4804461	25	2
35	4804470	28	2
42	4804481	36	4
54	4804492	42	5

G7270S slip coupling
(2 x press)



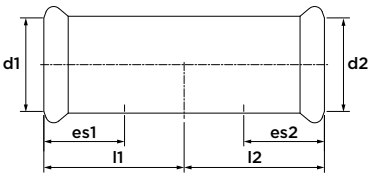

dimension	article no.	l1/l2	es1/es2
15	4804503	40	20
18	4804514	40	20
22	4804525	42	21
28	4804536	46	23
35	4804547	50	25
42	4804558	60	30
54	4804569	71	36

G7002A bend 90°
(2 x press)



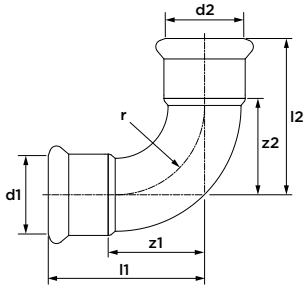

dimension	article no.	l1/l2	z1/z2	r
15	4803832	38	17	14
18	4803843	42	22	22
22	4803854	47	26	26
28	4803865	56	34	34
35	4803876	68	42	42
42	4803887	80	50	50
54	4803898	100	65	65

G7001A bend 90°
(press x male)



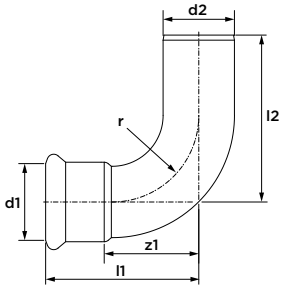

dimension	article no.	l1	l2	z1	r
15 x Ø15	4803766	36	50	16	18
18 x Ø18	4803777	42	53	22	22
22 x Ø22	4803788	47	58	27	26
28 x Ø28	4803799	58	64	34	34
35 x Ø35	4803801	69	82	44	42
42 x Ø42	4803810	81	101	52	50
54 x Ø54	4803821	100	120	66	65

G7041 bend 45°

(2 x press)



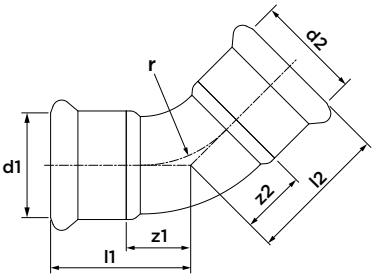

dimension	article no.	l1/l2	z1/z2	r
15	4803975	28	8	18
18	4803986	29	9	22
22	4803997	31	12	26
28	4804008	37	16	34
35	4804019	44	18	42
42	4804021	51	21	50
54	4804030	62	27	65

G7040 bend 45°

(press x male)



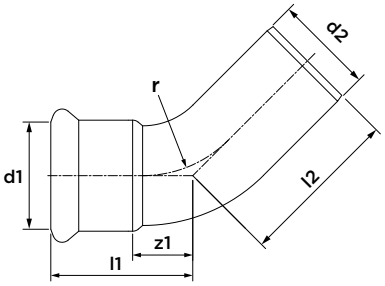

dimension	article no.	l1	l2	z1	r
15 x Ø15	4803909	28	37	8	18
18 x Ø18	4803911	29	39	9	22
22 x Ø22	4803920	32	44	11	26
28 x Ø28	4803931	37	47	14	34
35 x Ø35	4803942	43	58	17	42
42 x Ø42	4803953	51	71	21	50
54 x Ø54	4803964	62	82	27	65

7087 crossover

(2 x male)



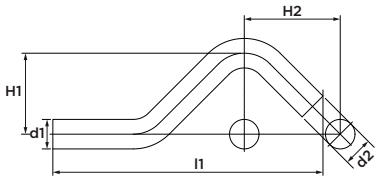

dimension	article no.	l1	H1	H2
Ø15	4800785	115	33	41
Ø18	4800796	124	35	44
Ø22	4800807	138	39	50

G7085 crossover

(2 x press)



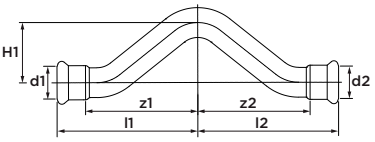

dimension	article no.	l1/l2	z1/z2	H1
15	4804041	70	50	34
22	4804063	85	64	50

G7130 tee
(3 x press)



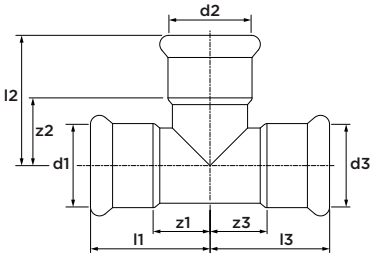

dimension	article no.	l1/l2/l3	z1/z2/z3
15	4804107	32	12
18	4804118	34	14
22	4804129	37	16
28	4804131	42	19
35	4804140	50	24
42	4804151	58	28
54	4804162	69	34

G7125 tee reduced
(3 x press)



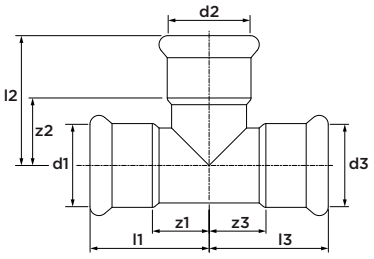

dimension	article no.	l1/l3	l2	z1/z3	z2
18 x 15 x 18	4804173	34	35	14	15
22 x 15 x 22	4804195	37	38	16	18
22 x 18 x 22	4804206	37	38	16	18
28 x 15 x 28	4804228	42	41	19	21
28 x 18 x 28	4804239	42	41	19	21
28 x 22 x 28	4804241	42	41	19	20
35 x 22 x 35	4804250	45	45	19	24
35 x 28 x 35	4804261	50	44	24	21
42 x 28 x 42	4804272	56	49	26	26
42 x 35 x 42	4804283	56	50	26	24
54 x 42 x 54	4804294	69	64	34	34

G7126 tee reduced
(3 x press)



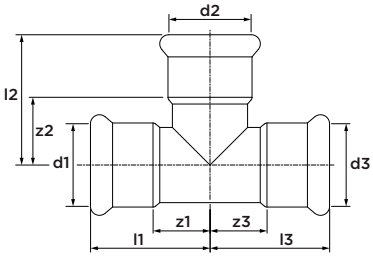

dimension	article no.	l1/l2	l3	z1/z2	z3
22 x 22 x 15	4804217	37	46	16	26

G7127 tee reduced
(3 x press)



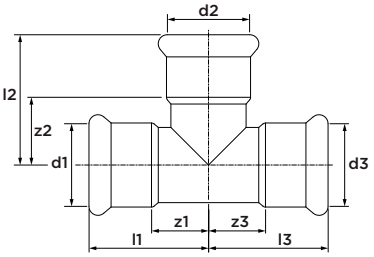

dimension	article no.	l1	l2	l3	z1	z2	z3
22 x 15 x 15	4804184	37	44	43	16	18	23

G6130G tee branch female

(press x female thread x press)



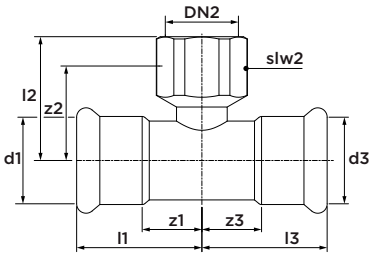

dimension	article no.	l1/l3	l2	z2	z1/z3	slw2
15 x Rp½" x 15	4804833	32	59	48	12	22
18 x Rp½" x 18	4804844	42	24	8	22	22
22 x Rp½" x 22	4804855	34	65	50	13	22
22 x Rp¾" x 22	4804866	37	67	51	16	30
28 x Rp½" x 28	4804877	44	29	14	21	22
28 x Rp¾" x 28	4804888	41	34	14	18	30
35 x Rp½" x 35	4804899	50	34	19	24	22
35 x Rp1" x 35	4804901	50	34	14	24	46
42 x Rp½" x 42	4804910	57	38	23	27	48
54 x Rp½" x 54	4804932	69	44	29	34	65

G7243 reducer

(male x press)



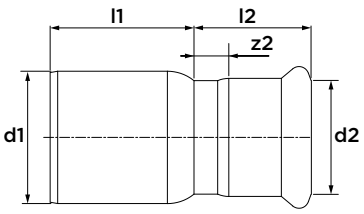

dimension	article no.	l1	l2	z2
Ø18 x 15	4804305	23	24	4
Ø22 x 15	4804316	28	24	4
Ø22 x 18	4804327	26	24	4
Ø28 x 15	4804338	37	25	4
Ø28 x 18	4804349	26	24	4
Ø28 x 22	4804351	30	25	4
Ø35 x 22	4804360	39	29	9
Ø35 x 28	4804371	35	28	5
Ø42 x 22	4804382	49	25	4
Ø42 x 28	4804393	44	27	4
Ø42 x 35	4804404	38	35	8
Ø54 x 35	4804415	53	35	9
Ø54 x 42	4804426	47	40	9

G6243G straight connector

(press x male thread)



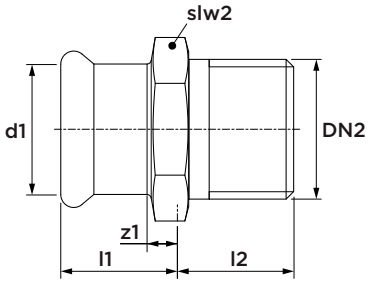

dimension	article no.	l1	l2	z1	slw2
15 x R½"	4803414	22	15	2	21
15 x R¾"	4803425	23	16	3	25
18 x R½"	4803436	22	15	2	25
18 x R¾"	4803447	23	16	3	25
22 x R½"	4803458	26	15	5	30
22 x R¾"	4803469	26	16	5	30
22 x R1"	4803471	26	18	5	32
28 x R¾"	4803480	27	16	4	36
28 x R1"	4803491	27	18	4	36
28 x R1¼"	4803502	27	21	4	40
35 x R1"	4803513	30	18	4	41
35 x R1¼"	4803524	29	21	3	41
42 x R1¼"	4803535	37	21	7	51
42 x R1½"	4803546	37	21	7	51
54 x R2"	4803557	39	24	4	57

G6270G straight connector

(press x female thread)



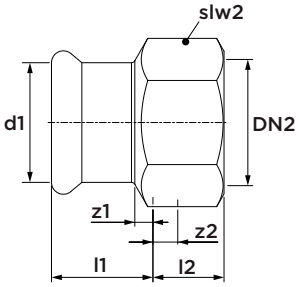

dimension	article no.	l1	l2	z1	z2	slw2
15 x Rp½"	4803568	19	18	2	8	25
15 x Rp¾"	4803579	17	19	1	8	30
18 x Rp½"	4803581	19	18	1	8	25
18 x Rp¾"	4803590	20	19	2	9	30
22 x Rp½"	4803601	19	17	1	7	30
22 x Rp¾"	4803612	20	19	1	9	30
28 x Rp1"	4803623	23	22	1	10	37
35 x Rp1¼"	4803634	25	25	1	11	46
42 x Rp1½"	4803645	27	25	1	11	48
54 x Rp2"	4803656	32	25	1	11	48

G6092G bend 90°

(press x male thread)



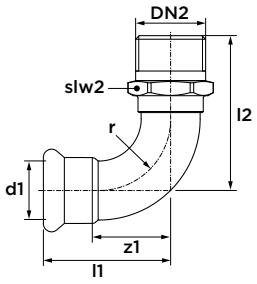

dimension	article no.	l1	z1	l2	slw2	r
15 x R½"	4804756	37	18	67	19	18
18 x R½"	4804767	64	44	34	19	22
18 x R¾"	4804778	60	40	37	25	22
22 x R¾"	4804789	48	27	79	30	26
28 x R1"	4804791	57	35	88	36	34
35 x R1¼"	4804800	80	55	59	41	42
42 x R1½"	4804811	104	74	57	51	50
54 x R2"	4804822	104	69	80	57	65

G6090G bend 90°

(press x female thread)



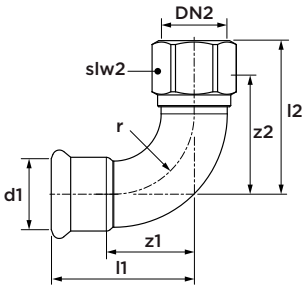

dimension	article no.	l1	l2	z1	z2	slw2	r
15 x Rp½"	4804646	55	26	35	12	22	18
15 x Rp¾"	4804657	63	29	43	12	30	18
18 x Rp½"	4804668	55	25	35	9	22	22
18 x Rp¾"	4804679	61	29	41	11	30	22
22 x Rp½"	4804681	56	25	35	14	22	26
22 x Rp¾"	4804690	62	29	41	13	30	26
22 x Rp1"	4804701	66	38	45	21	37	26
28 x Rp1"	4804712	73	37	50	18	37	34
35 x Rp1¼"	4804723	83	43	57	19	46	42
42 x Rp1½"	4804734	88	46	60	27	48	50
54 x Rp2"	4804745	104	55	72	33	65	65

G6340 straight union

(2 x press)



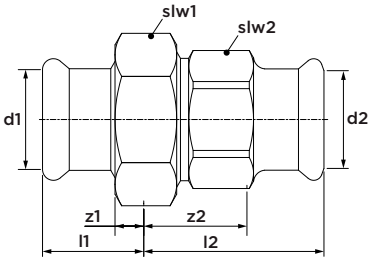

dimension	article no.	l1	l2	z1	z2	slw1	slw2
15	4803667	25	36	5	16	34	28
22	4803689	29	38	8	17	41	36
28	4803691	34	41	11	18	48	41
35	4803700	36	46	10	20	58	50

including flat seal

G6360 coupling with nut

(press x female thread)



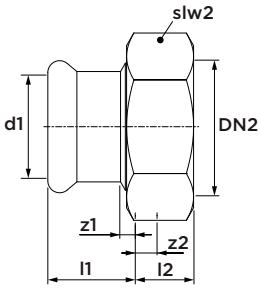

dimension	article no.	l1	l2	z1	z2	slw2
15 x G⅞"	4803733	20	14	4	9	34
28 x G1⅜"	4803755	23	22	4	18	48

including flat seal

G6471G wallplate 90°

(press x female thread)



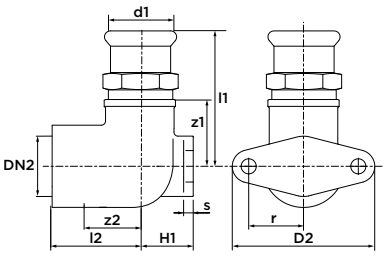

dimension	article no.	l1	l2	z1	z2	H1	D2	s	r
15 x Rp½"	4804954	51	22	31	11	21	52	3	20
18 x Rp½"	4804965	51	22	31	10	22	52	3	20
22 x Rp¾"	4804976	61	31	40	15	20	52	3	20

G7301 stop end

(1 x press)



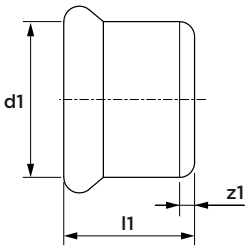

dimension	article no.	l1	z1
15	4804571	20	2
18	4804580	20	2
22	4804591	21	2
28	4804602	23	2
35	4804613	26	2
42	4804624	30	2
54	4804635	35	2

G7999 o-ring standard

(yellow, NBR) for Copper Gas



dimension	article no.
15	4805108
18	4805119
22	4805121
28	4805130
35	4805141
42	4805152
54	4805163



VSH XPress

CuNi



CUN7550 CuNi tube
(6m length)



dimension	article no.	DN
15 x 1.0	7509007	10
18 x 1.0	7509018	12
22 x 1.0	7509029	15
28 x 1.5	7509031	25
35 x 1.5	7509040	32
42 x 1.5	7509051	40
54 x 1.5	7509062	50
76.1 x 2.0	7509073	65
88.9 x 2.0	7509084	80
108 x 2.0	7509095	100

CUN7501 straight coupling
(2 x press)



dimension	article no.
15	7500009
18	7500011
22	7500020
28	7500031
35	7500042
42	7500053
54	7500064
76.1	7500075
88.9	7500086
108	7500097

CUN7503 slip coupling
(2 x press)



dimension	article no.
15	7500108
18	7500119
22	7500121
28	7500130
35	7500141
42	7500152
54	7500163
76.1	7500174
88.9	7500185
108	7500196

CUN7508 bend 90°
(2 x press)



dimension	article no.
15	7500405
18	7500416
22	7500427
28	7500438
35	7500449
42	7500451
54	7500460
76.1	7500471
88.9	7500482
108	7500493

CUN7511 bend 90°
(press x male)



dimension	article no.
15	7500504
18	7500515
22	7500526
28	7500537
35	7500548
42	7500559
54	7500561
76.1	7500570
88.9	7500581
108	7500592

CUN7512 bend 45°
(press x male)



dimension	article no.
15	7500889
18	7500891
22	7500900
28	7500911
35	7500922
42	7500933
54	7500944
76.1	7500955
88.9	7500966
108	7500977

CUN7513 bend 45°
(2 x press)



dimension	article no.
15	7500781
18	7500790
22	7500801
28	7500812
35	7500823
42	7500834
54	7500845
76.1	7500856
88.9	7500867
108	7500878

CUN7520 bend 15°
(2 x press)



dimension	article no.
15	7501164
22	7501175
28	7501186
35	7501197
42	7501208
54	7501219
76.1	7501221
88.9	7501230
108	7501241

CUN7519 bend 15°
(press x male)



dimension	article no.
15	7501252
22	7501263
28	7501274
35	7501285
42	7501296
54	7501307
76.1	7501318
88.9	7501329
108	7501331

CUN7522 bend 30°
(2 x press)



dimension	article no.
15	7500988
22	7500999
28	7501001
35	7501010
42	7501021
54	7501032
76.1	7501043
88.9	7501054
108	7501065

CUN7521 bend 30°
(press x male)



dimension	article no.
15	7501076
22	7501087
28	7501098
35	7501109
42	7501111
54	7501120
76.1	7501131
88.9	7501142
108	7501153

CUN7524 bend 60°
(2 x press)



dimension	article no.
15	7500603
22	7500614
28	7500625
35	7500636
42	7500647
54	7500658
76.1	7500669
88.9	7500671
108	7500680

CUN7523 bend 60°
(press x male)



dimension	article no.
15	7500691
22	7500702
28	7500713
35	7500724
42	7500735
54	7500746
76.1	7500757
88.9	7500768
108	7500779

CUN7517 crossover
(2 x male)



dimension	article no.
Ø15	7501340
Ø18	7501351
Ø22	7501362
Ø28	7501373

CUN7514 tee
(3 x press)



dimension	article no.
15	7501384
18	7501395
22	7501406
28	7501417
35	7501428
42	7501439
54	7501441
76.1	7501450
88.9	7501461
108	7501472

CUN7515 tee reduced
(3 x press)



dimension	article no.
18 x 15 x 18	7501483
22 x 15 x 22	7501494
22 x 18 x 22	7501505
28 x 15 x 28	7501516
28 x 18 x 28	7501527
28 x 22 x 28	7501538
35 x 15 x 35	7501549
35 x 18 x 35	7501551
35 x 22 x 35	7501560
35 x 28 x 35	7501571
42 x 22 x 42	7501582
42 x 28 x 42	7501593
42 x 35 x 42	7501604
54 x 22 x 54	7501615
54 x 28 x 54	7501626
54 x 35 x 54	7501637
54 x 42 x 54	7501648
76.1 x 22 x 76.1	7501659
76.1 x 28 x 76.1	7501661
76.1 x 35 x 76.1	7501670
76.1 x 42 x 76.1	7501681
76.1 x 54 x 76.1	7501692
88.9 x 22 x 88.9	7501703
88.9 x 28 x 88.9	7501714
88.9 x 35 x 88.9	7501725
88.9 x 42 x 88.9	7501736
88.9 x 54 x 88.9	7501747
88.9 x 76.1 x 88.9	7501758
108 x 22 x 108	7501769
108 x 28 x 108	7501771
108 x 35 x 108	7501780
108 x 42 x 108	7501791
108 x 54 x 108	7501802
108 x 76.1 x 108	7501813
108 x 88.9 x 108	7501824

CUN7518 tee
(press x female thread x press)



dimension	article no.
15 x Rp½" x 15	7502286
18 x Rp½" x 18	7502297
18 x Rp¾" x 18	7502308
22 x Rp½" x 22	7502319
22 x Rp¾" x 22	7502321
28 x Rp½" x 28	7502330
28 x Rp¾" x 28	7502341
35 x Rp½" x 35	7502352
35 x Rp¾" x 35	7502363
42 x Rp½" x 42	7502374
42 x Rp¾" x 42	7502385
54 x Rp½" x 54	7502396
54 x Rp¾" x 54	7502407
54 x Rp2" x 54	7502418
76.1 x Rp¾" x 76.1	7502429
76.1 x Rp2" x 76.1	7502451
88.9 x Rp¾" x 88.9	7502431
88.9 x Rp2" x 88.9	7502462
108 x Rp¾" x 108	7502440
108 x Rp2" x 108	7502473

CUN7505 straight connector
(press x male thread)



dimension	article no.
15 x R½"	7501923
18 x R½"	7501934
18 x R¾"	7501945
22 x R¾"	7501956
28 x R1"	7501967
35 x R1¼"	7501978
42 x R1½"	7501989

CUN7507 reducer
(male x press)



dimension	article no.
Ø18 x 15	7500207
Ø22 x 15	7500218
Ø22 x 18	7500229
Ø28 x 15	7500231
Ø28 x 18	7500240
Ø28 x 22	7500251
Ø35 x 22	7500262
Ø35 x 28	7500273
Ø42 x 28	7500284
Ø42 x 35	7500295
Ø54 x 28	7500306
Ø54 x 35	7500317
Ø54 x 42	7500328
Ø76.1 x 42	7500341
Ø76.1 x 54	7500339
Ø88.9 x 54	7500350
Ø88.9 x 76.1	7500361
Ø108 x 54	7500372
Ø108 x 76.1	7500383
Ø108 x 88.9	7500394

CUN7502 straight connector
(press x female thread)



dimension	article no.
15 x Rp½"	7501835
18 x Rp½"	7501846
18 x Rp¾"	7501857
22 x Rp½"	7501868
22 x Rp¾"	7501879
28 x Rp1"	7501881
35 x Rp1¼"	7501890
42 x Rp1½"	7501901
54 x Rp2"	7501912

CUN7528 angle adapter 90°
(press x male thread)



dimension	article no.
15 x R½"	7502209
18 x R½"	7502211
22 x R¾"	7502231
28 x R1"	7502242
35 x R1¼"	7502253
42 x R1½"	7502264
54 x R2"	7502275

CUN7509 angle adapter 90°
(male x female thread)



dimension	article no.
15 x Rp½"	7502143
18 x Rp½"	7502154
22 x Rp½"	7502176
22 x Rp¾"	7502165
28 x Rp½"	7502187
35 x Rp1¼"	7502198

CUN7535 straight union
(press x male thread)



dimension	article no.
15 x R½"	7502077
18 x R½"	7502088
22 x R¾"	7502099
28 x R1"	7502101
35 x R1¼"	7502110
42 x R1½"	7502121
54 x R2"	7502132

including flat seal

CUN7538 straight union
(press x female thread)



dimension	article no.
15 x Rp½"	7502000
18 x Rp½"	7502011
22 x Rp¾"	7502022
28 x Rp1"	7502033
35 x Rp5/4"	7502044
42 x Rp3/2"	7502055
54 x Rp2"	7502066

including flat seal

CUN7526 flanged connector PN 16
(1 x press)



dimension	article no.
15	7502484
18	7502495
22	7502506
28	7502517
35	7502528
42	7502539
54	7502541
76.1	7502550
88.9	7502561
108	7502572

CUN7540 deck fitting
(2 x male)



dimension	article no.
Ø15	7502583
Ø18	7502594
Ø22	7502605
Ø28	7502616
Ø35	7502627
Ø42	7502638
Ø54	7502649
Ø76.1	7502651
Ø88.9	7502660
Ø108	7502671

VSH XPress

valves



XPR10100 VSH XPress FullFlow Carbon ball valve

(2 x press)



specifications

- 100% full flow
- compact, one piece design
- max. pressure 16 bar
- operating temperature -35 to 135°C
- interchangeable coloured indentification clips
- M-profile

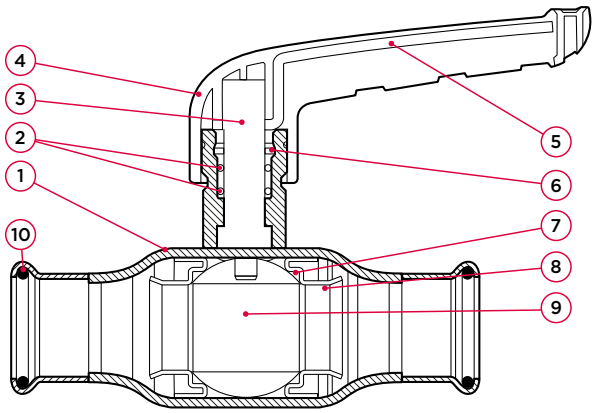

no.	component	material
1	valve housing	carbon steel (P235GH)
2	o-ring	EPDM
3	stem	stainless steel (1.4401)
4	handle	fiberglass reinforced nylon (PA66)
5	handle reinforcement	carbon steel
6	friction ring	PTFE
7	seal	PTFE
8	support ring	stainless steel
9	ball	brass
10	o-ring	EPDM

maximum pressure [bar]

operating pressure	test pressure shell	test pressure seat
16	24	17.6

pressure equipment directive category	
all sizes	SEP

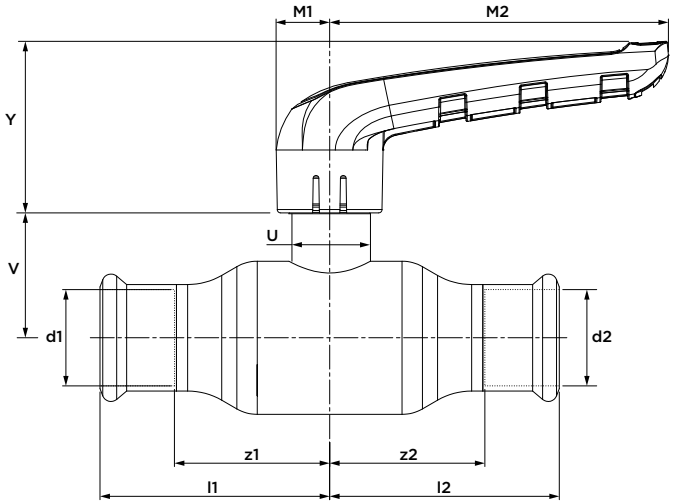

dimension		article no.	weight [kg]	Kvs [m³/h]	l1/l2	z1/z2	Y	M1	M2	V	U
15	(DN10)	101 0000 100	0.17	13	47	27	38	12	75	26	18
18	(DN15)	101 5000 100	0.21	21.1	52	32	38	12	75	28	18
22	(DN20)	102 0000 100	0.21	37.1	61	40	38	12	75	31	18
28	(DN25)	102 5000 100	0.55	65.5	68	45	50	15	100	37	24
35	(DN32)	103 2000 100	0.86	90.7	81	55	50	15	100	43	24
42	(DN40)	104 0000 100	1.39	141.5	99	70	59	18	119	47	28
54	(DN50)	105 0000 100	2.32	308.4	113	79	59	18	119	55	28

XPR10101 VSH XPress FullFlow Carbon valve with extended stem

(2 x press)



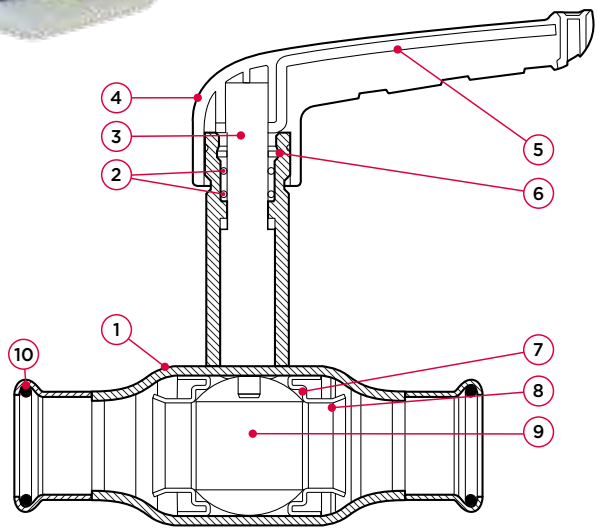

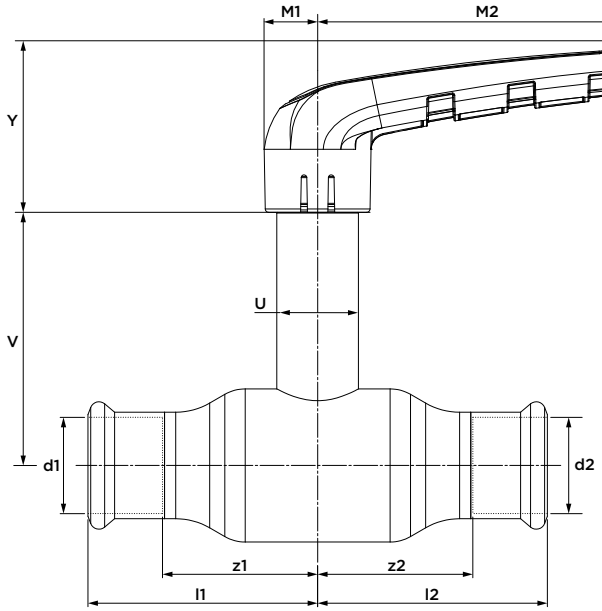

specifications

- 100% full flow
- compact, one piece design
- max. pressure 16 bar
- operating temperature -35 to 135°C
- interchangeable coloured indentification clips
- M-profile

no.	component	material
1	valve housing	carbon steel (P235GH)
2	o-ring	EPDM
3	stem	stainless steel (1.4401)
4	handle	fiberglass reinforced nylon (PA66)
5	handle reinforcement	carbon steel
6	friction ring	PTFE
7	seal	PTFE
8	support ring	stainless steel
9	ball	brass
10	o-ring	EPDM

maximum pressure [bar]

operating pressure	test pressure shell	test pressure seat
16	24	17.6

pressure equipment directive category

all sizes	SEP

dimension		article no.	weight [kg]	Kvs [m³/h]	l1/l2	z1/z2	Y	M1	M2	V	U
15	(DN10)	101 0000 101	0.25	13	47	27	38	12	75	68	18
18	(DN15)	101 5000 101	0.29	21.1	52	32	38	12	75	70	18
22	(DN20)	102 0000 101	0.30	37.1	61	40	38	12	75	73	18
28	(DN25)	102 5000 101	0.68	65.5	68	45	50	15	100	74	24
35	(DN32)	103 2000 101	0.99	90.7	81	55	50	15	100	80	24
42	(DN40)	104 0000 101	1.62	141.5	99	70	59	18	119	98	28
54	(DN50)	105 0000 101	2.55	308.4	113	79	59	18	119	106	28

XPR11000 VSH XPress FullFlow Carbon ball valve

(press x female thread)



specifications

- carbon steel
- 100% full flow
- compact, one piece design
- max. pressure 16 bar
- operating temperature -35 to 135°C
- interchangeable coloured indentification clips
- M-profile

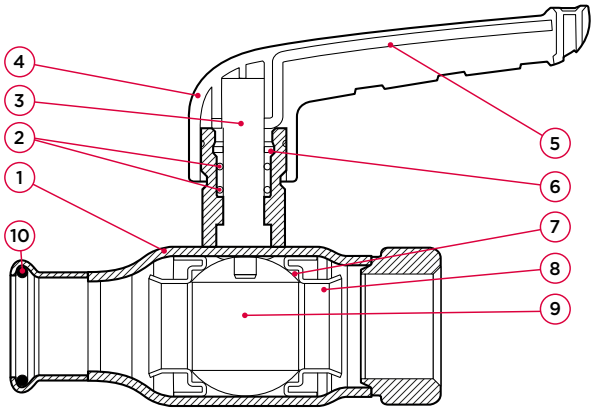

no.	component	material
1	valve housing	carbon steel (P235GH)
2	o-ring	EPDM
3	stem	stainless steel (1.4401)
4	handle	fiberglass reinforced nylon (PA66)
5	handle reinforcement	carbon steel
6	friction ring	PTFE
7	seal	PTFE
8	support ring	stainless steel
9	ball	brass
10	o-ring	EPDM

maximum pressure [bar]

operating pressure	test pressure shell	test pressure seat
16	24	17.6

pressure equipment directive category	
all sizes	SEP

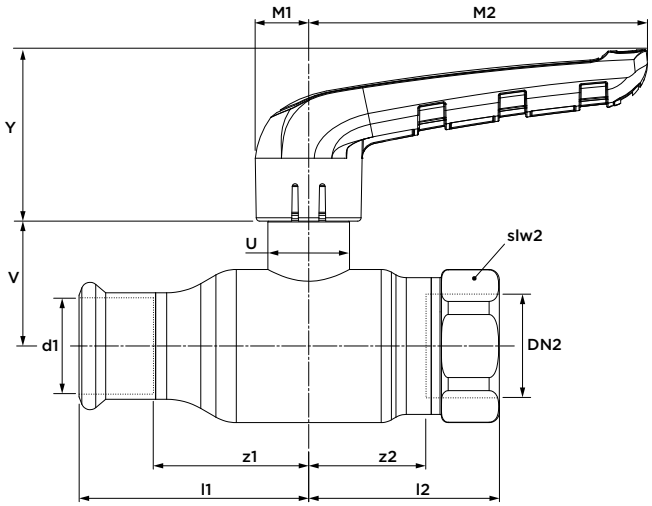

dimension		article no.	weight [kg]	Kvs [m³/h]	l1	l2	z1	z2	Y	M1	M2	V	U	slw2
15 x G1"/2"	(DN10)	101 0001 010	0.19	13	47	38	28	27	38	12	75	26	18	27
18 x G¾"	(DN15)	101 5001 010	0.25	21.1	52	43	32	32	38	12	75	28	18	32
22 x G¾"	(DN20)	102 0001 000	0.30	37.1	61	52	40	36	38	12	75	31	18	36
28 x G1"	(DN25)	102 5001 000	0.61	65.5	68	56	45	37	50	15	100	37	24	41
35 x G1¼"	(DN32)	103 2001 000	0.97	90.7	81	67	55	46	50	15	100	43	24	50
42 x G1½"	(DN40)	104 0001 000	1.53	141.5	99	78	69	57	59	18	119	47	28	56
54 x G2"	(DN50)	105 0001 000	2.62	308.4	113	96	79	69	59	18	119	55	28	69

XPR11001 VSH XPress FullFlow Carbon ball valve with extended stem

(press x female thread)



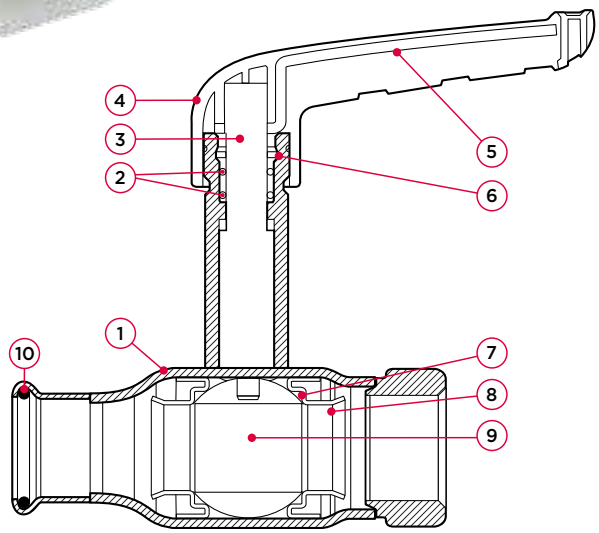

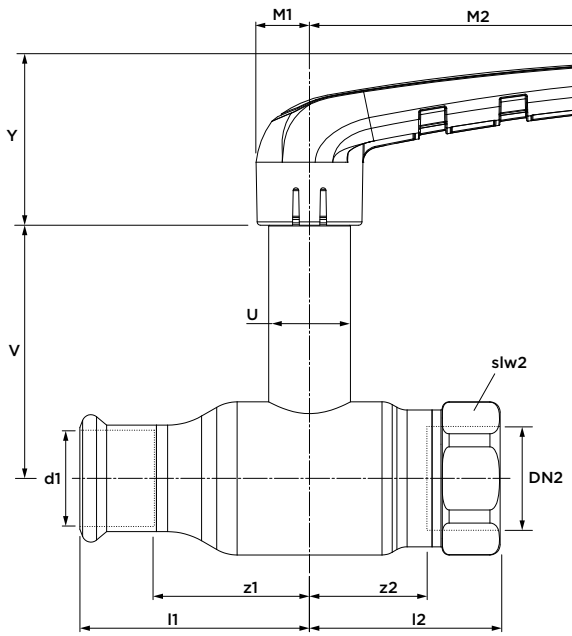

specifications

- carbon steel
- 100% full flow
- compact, one piece design
- max. pressure 16 bar
- operating temperature -35 to 135°C
- interchangeable coloured indentification clips
- M-profile

no.	component	material
1	valve housing	carbon steel (P235GH)
2	o-ring	EPDM
3	stem	stainless steel (1.4401)
4	handle	fiberglass reinforced nylon (PA66)
5	handle reinforcement	carbon steel
6	friction ring	PTFE
7	seal	PTFE
8	support ring	stainless steel
9	ball	brass
10	o-ring	EPDM

maximum pressure [bar]

operating pressure	test pressure shell	test pressure seat
16	24	17.6

pressure equipment directive category

all sizes	SEP

dimension		article no.	weight [kg]	Kvs [m³/h]	l1	l2	z1	z2	Y	M1	M2	V	U	slw2
15 x G1"/2"	(DN10)	101 0001 011	0.28	13	38	47	27	28	38	12	75	68	18	27
18 x G¾"	(DN15)	101 5001 011	0.33	21.1	43	52	32	32	38	12	75	70	18	32
22 x G¾"	(DN20)	102 0001 001	0.38	37.1	52	61	36	40	38	12	75	73	18	36
28 x G1"	(DN25)	102 5001 001	0.74	65.5	56	68	37	45	50	15	100	74	24	41
35 x G1¼"	(DN32)	103 2001 001	1.11	90.7	67	81	46	55	50	15	100	80	24	50
42 x G1½"	(DN40)	104 0001 001	1.75	141.5	78	99	57	69	59	18	119	98	28	56
54 x G2"	(DN50)	105 0001 001	2.84	308.4	96	113	69	79	59	18	119	106	28	69

XPR11400 VSH XPress FullFlow Carbon ball valve

(press x union)



specifications

- 100% full flow
- compact, one piece design
- max. pressure 16 bar
- operating temperature -35 to 135°C
- interchangeable coloured indentification clips
- M-profile

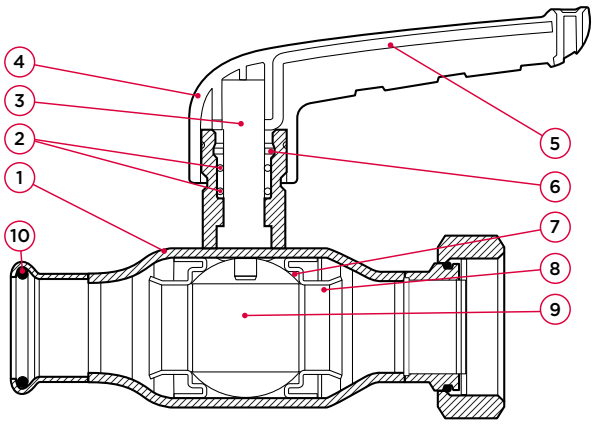

no.	component	material
1	valve housing	carbon steel (P235GH)
2	o-ring	EPDM
3	stem	stainless steel (1.4401)
4	handle	fiberglass reinforced nylon (PA66)
5	handle reinforcement	carbon steel
6	friction ring	PTFE
7	seal	PTFE
8	support ring	stainless steel
9	ball	brass
10	o-ring	EPDM

maximum pressure [bar]

operating pressure	test pressure shell	test pressure seat
16	24	17.6

pressure equipment directive category	
all sizes	SEP

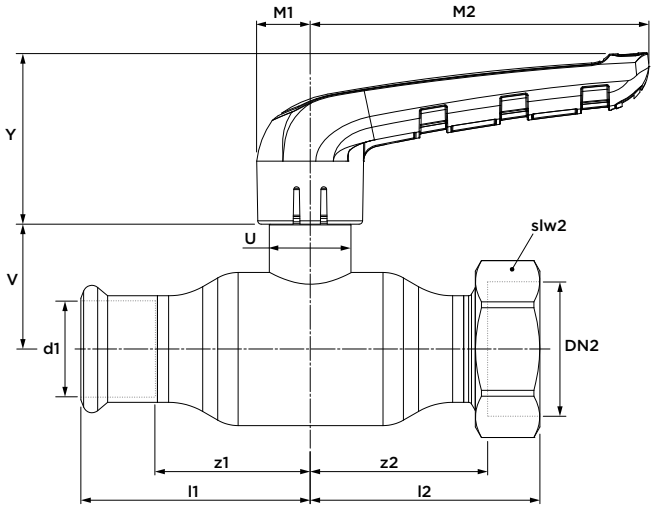

dimension		article no.	weight [kg]	Kvs [m³/h]	l1	l2	z1	z2	Y	M1	M2	V	U	slw2
15 x G¾"	(DN10)	101 0001 410	0.22	13	47	59	28	49	38	12	75	26	18	27
18 x G¾"	(DN15)	101 5001 400	0.26	21.1	52	53	32	44	38	12	75	28	18	32
22 x G¾"	(DN20)	102 0001 410	0.28	37.1	61	72	41	62	38	12	75	31	18	32
28 x G1¼"	(DN25)	102 5001 400	0.65	65.5	68	67	46	55	50	15	100	37	24	46
35 x G1½"	(DN32)	103 2001 400	0.97	90.7	81	79	56	67	50	15	100	43	24	52
42 x G1¾"	(DN40)	104 0001 400	1.51	141.5	99	92	70	81	59	18	119	47	28	58
54 x G2¼"	(DN50)	105 0001 400	2.57	308.4	113	106	79	93	59	18	119	55	28	72

XPR11401 VSH XPress FullFlow Carbon ball valve with extended stem

(press x union)



specifications

- 100% full flow
- compact, one piece design
- max. pressure 16 bar
- operating temperature -35 to 135°C
- interchangeable coloured indentification clips
- M-profile

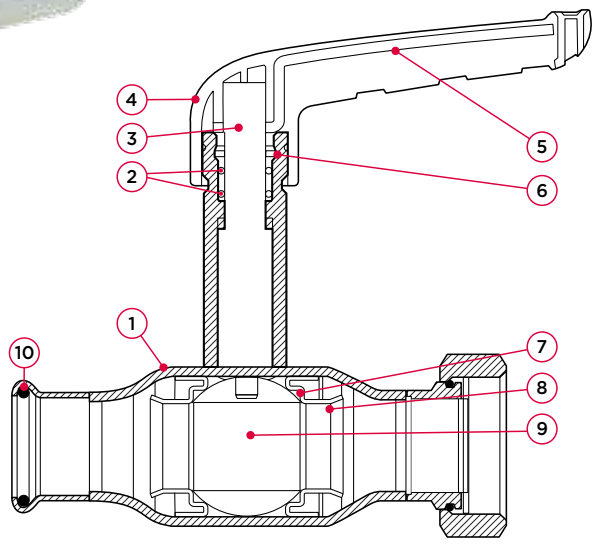

no.	component	material
1	valve housing	carbon steel (P235GH)
2	o-ring	EPDM
3	stem	stainless steel (1.4401)
4	handle	fiberglass reinforced nylon (PA66)
5	handle reinforcement	carbon steel
6	friction ring	PTFE
7	seal	PTFE
8	support ring	stainless steel
9	ball	brass
10	o-ring	EPDM

maximum pressure [bar]

operating pressure	test pressure shell	test pressure seat
16	24	17.6

pressure equipment directive category	
all sizes	SEP

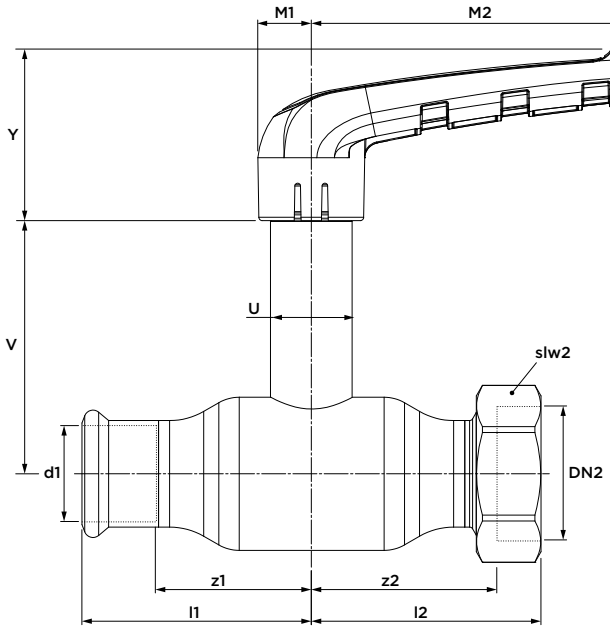

dimension		article no.	weight [kg]	Kvs [m³/h]	l1	l2	z1	z2	Y	M1	M2	V	U	slw2
15 x G¾"	(DN10)	101 0001 411	0.30	13	47	59	28	49	38	12	75	68	18	27
18 x G¾"	(DN15)	101 5001 401	0.35	21.1	52	53	32	44	38	12	75	70	18	32
22 x G¾"	(DN20)	102 0001 411	0.36	37.1	61	72	41	62	38	12	75	73	18	32
28 x G1¼"	(DN25)	102 5001 401	0.78	65.5	68	67	46	55	50	15	100	74	24	46
35 x G1½"	(DN32)	103 2001 401	1.11	90.7	81	79	56	67	50	15	100	80	24	52
42 x G1¾"	(DN40)	104 0001 401	1.73	141.5	99	92	70	81	59	18	119	98	28	58
54 x G2¼"	(DN50)	105 0001 401	2.79	308.4	113	106	79	93	59	18	119	106	28	72

XPR20100 VSH XPress FullFlow Stainless ball valve

(2 x press)



specifications

- 100% full flow
- compact, one piece design
- max. pressure 16 bar
- operating temperature -35 to 135°C
- interchangeable coloured indentification clips
- M-profile

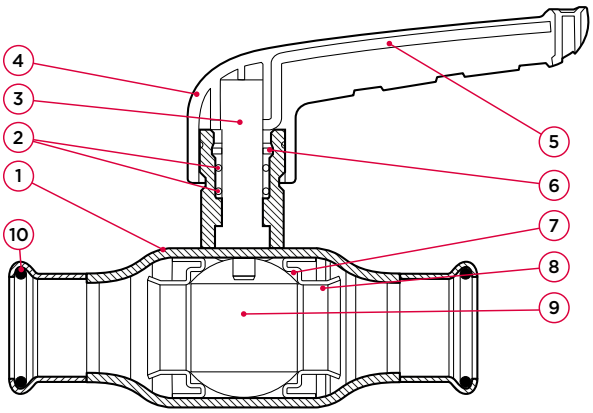

no.	component	material
1	valve housing	stainless steel (1.4401)
2	o-ring	EPDM
3	stem	stainless steel (1.4401)
4	handle	fiberglass reinforced nylon (PA66)
5	handle reinforcement	stainless steel (1.4401)
6	friction ring	PTFE
7	seal	PTFE
8	support ring	stainless steel (1.4401)
9	ball	stainless steel (1.4401)
10	o-ring	EPDM

maximum pressure [bar]

operating pressure	test pressure shell	test pressure seat
16	24	17.6

pressure equipment directive category	
all sizes	SEP

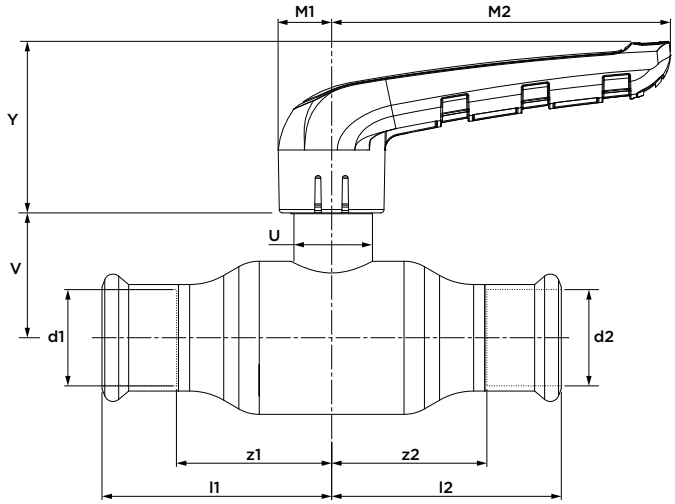

dimension		article no.	weight [kg]	Kvs [m³/h]	l1/l2	z1/z2	Y	M1	M2	V	U
15	(DN10)	201 0000 100	0.17	13	47	27	38	12	75	26	18
18	(DN15)	201 5000 100	0.21	21.1	52	32	38	12	75	28	18
22	(DN20)	202 0000 100	0.21	37.1	61	40	38	12	75	31	18
28	(DN25)	202 5000 100	0.55	65.5	68	45	50	15	100	37	24
35	(DN32)	203 2000 100	0.86	90.7	81	55	50	15	100	43	24
42	(DN40)	204 0000 100	1.39	141.5	99	70	59	18	119	47	28
54	(DN50)	105 0000 100	2.32	308.4	113	79	59	18	119	55	28

XPR20101 VSH XPress FullFlow Stainless ball valve with extended stem

(2 x press)



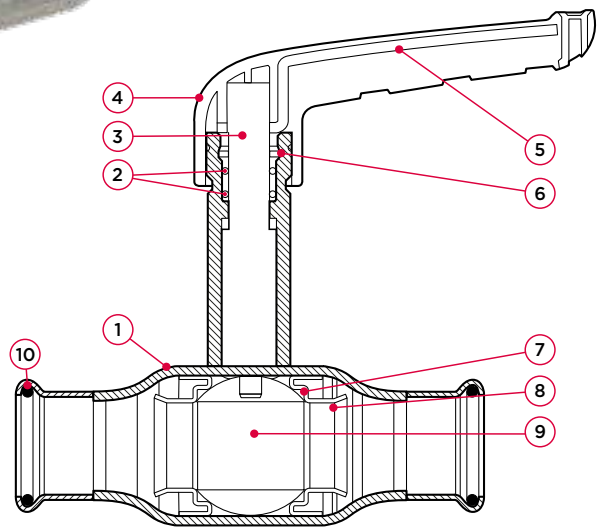

specifications

- 100% full flow
- compact, one piece design
- max. pressure 16 bar
- operating temperature -35 to 135°C
- interchangeable coloured indentification clips
- M-profile

no.	component	material
1	valve housing	stainless steel (1.4401)
2	o-ring	EPDM
3	stem	stainless steel (1.4401)
4	handle	fiberglass reinforced nylon (PA66)
5	handle reinforcement	stainless steel (1.4401)
6	friction ring	PTFE
7	seal	PTFE
8	support ring	stainless steel (1.4401)
9	ball	stainless steel (1.4401)
10	o-ring	EPDM

maximum pressure [bar]

operating pressure	test pressure shell	test pressure seat
16	24	17.6

pressure equipment directive category	
all sizes	SEP

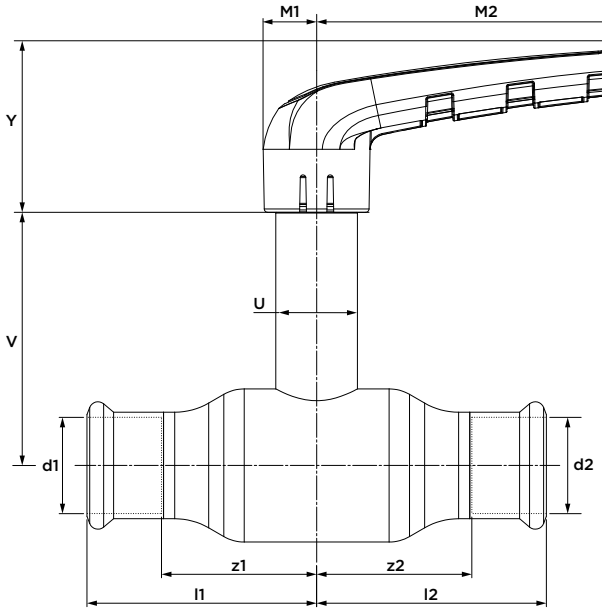

dimension.		article no.	weight [kg]	Kvs [m³/h]	l1/l2	z1/z2	Y	M1	M2	V	U
15	(DN10)	201 0000 101	0.25	13	47	27	38	12	75	68	18
18	(DN15)	201 5000 101	0.29	21.1	52	32	38	12	75	70	18
22	(DN20)	202 0000 101	0.30	37.1	61	40	38	12	75	73	18
28	(DN25)	202 5000 101	0.68	65.5	68	45	50	15	100	74	24
35	(DN32)	203 2000 101	0.99	90.7	81	55	50	15	100	80	24
42	(DN40)	204 0000 101	1.62	141.5	99	70	59	18	119	98	28
54	(DN50)	205 0000 101	2.55	308.4	113	79	59	18	119	106	28

XPR21000 VSH XPress FullFlow Stainless ball valve

(press x female thread)



specifications

- 100% full flow
- compact, one piece design
- max. pressure 16 bar
- operating temperature -35 to 135°C
- interchangeable coloured indentification clips
- M-profile

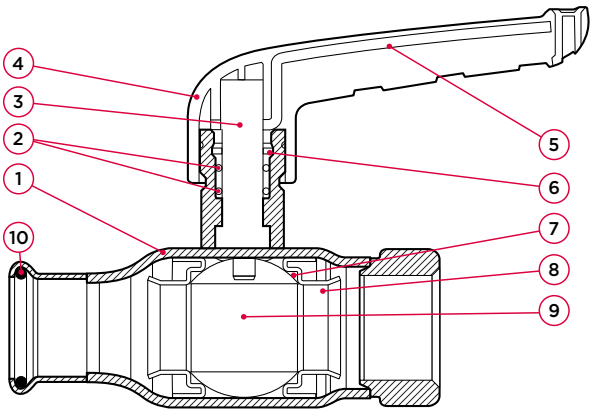

no.	component	material
1	valve housing	stainless steel (1.4401)
2	o-ring	EPDM
3	stem	stainless steel (1.4401)
4	handle	fiberglass reinforced nylon (PA66)
5	handle reinforcement	stainless steel (1.4401)
6	friction ring	PTFE
7	seal	PTFE
8	support ring	stainless steel (1.4401)
9	ball	stainless steel (1.4401)
10	o-ring	EPDM

maximum pressure [bar]

operating pressure	test pressure shell	test pressure seat
16	24	17.6

pressure equipment directive category	
all sizes	SEP

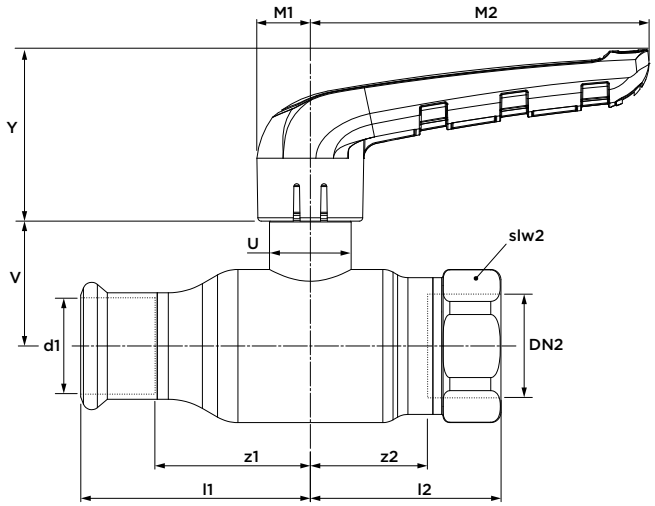

dimension		article no.	weight [kg]	Kvs [m³/h]	l1	l2	z1	z2	Y	M1	M2	V	U	slw2
15 x G1"/2"	(DN10)	201 0001 010	0.19	13	47	38	28	27	38	12	75	26	18	27
18 x G¾"	(DN15)	201 5001 010	0.25	21.1	52	43	32	32	38	12	75	28	18	32
22 x G¾"	(DN20)	202 0001 000	0.30	37.1	61	52	40	36	38	12	75	31	18	36
28 x G1"	(DN25)	202 5001 000	0.61	65.5	68	56	45	37	50	15	100	37	24	41
35 x G1¼"	(DN32)	203 2001 000	0.97	90.7	81	67	55	46	50	15	100	43	24	50
42 x G1½"	(DN40)	204 0001 000	1.53	141.5	99	78	69	57	59	18	119	47	28	56
54 x G2"	(DN50)	205 0001 000	2.62	308.4	113	96	79	69	59	18	119	55	28	69

XPR21001 VSH XPress FullFlow Stainless ball valve with extended stem

(press x female thread)



specifications

- 100% full flow
- compact, one piece design
- max. pressure 16 bar
- operating temperature -35 to 135°C
- interchangeable coloured indentification clips
- M-profile

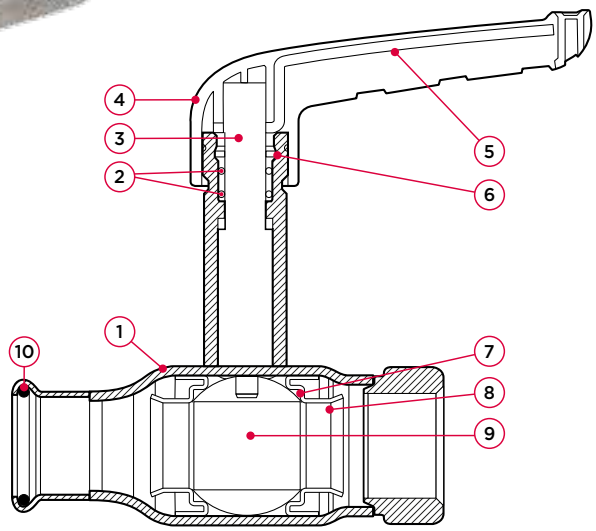

no.	component	material
1	valve housing	stainless steel (1.4401)
2	o-ring	EPDM
3	stem	stainless steel (1.4401)
4	handle	fiberglass reinforced nylon (PA66)
5	handle reinforcement	stainless steel (1.4401)
6	friction ring	PTFE
7	seal	PTFE
8	support ring	stainless steel (1.4401)
9	ball	stainless steel (1.4401)
10	o-ring	EPDM

maximum pressure [bar]

operating pressure	test pressure shell	test pressure seat
16	24	17.6

pressure equipment directive category	
all sizes	SEP

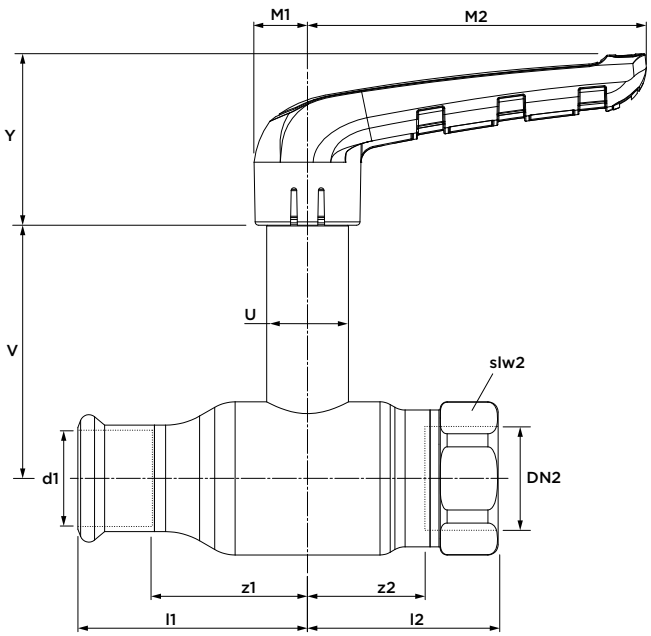

dimension		article no.	weight [kg]	Kvs [m³/h]	l1	l2	z1	z2	Y	M1	M2	V	U	slw2
15 x G1"/2"	(DN10)	201 0001 011	0.28	13	47	38	28	27	38	12	75	68	18	27
18 x G¾"	(DN15)	201 5001 011	0.33	21.1	52	43	32	32	38	12	75	70	18	32
22 x G¾"	(DN20)	202 0001 001	0.38	37.1	61	52	40	36	38	12	75	73	18	36
28 x G1"	(DN25)	202 5001 001	0.74	65.5	68	56	45	37	50	15	100	74	24	41
35 x G1¼"	(DN32)	203 2001 001	1.11	90.7	81	67	55	46	50	15	100	80	24	50
42 x G1½"	(DN40)	204 0001 001	1.75	141.5	99	78	69	57	59	18	119	98	28	56
54 x G2"	(DN50)	205 0001 001	2.84	308.4	113	96	79	69	59	18	119	106	28	69

XPR21400 VSH XPress FullFlow Stainless ball valve

(press x union nut)



specifications

- 100% full flow
- compact, one piece design
- max. pressure 16 bar
- operating temperature -35 to 135°C
- interchangeable coloured indentification clips
- M-profile

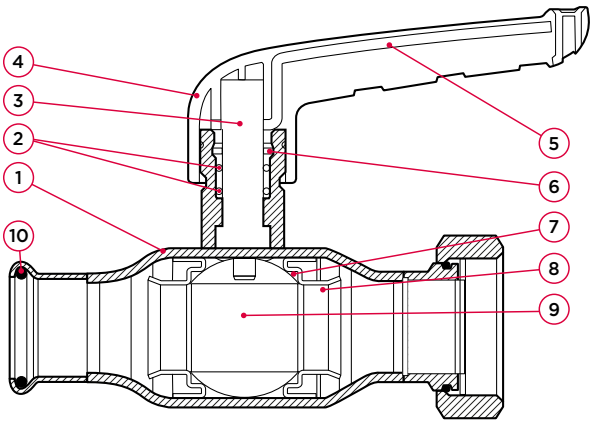

no.	component	material
1	valve housing	stainless steel (1.4401)
2	o-ring	EPDM
3	stem	stainless steel (1.4401)
4	handle	fiberglass reinforced nylon (PA66)
5	handle reinforcement	stainless steel (1.4401)
6	friction ring	PTFE
7	seal	PTFE
8	support ring	stainless steel (1.4401)
9	ball	stainless steel (1.4401)
10	o-ring	EPDM

maximum pressure [bar]

operating pressure	test pressure shell	test pressure seat
16	24	17.6

pressure equipment directive category	
all sizes	SEP

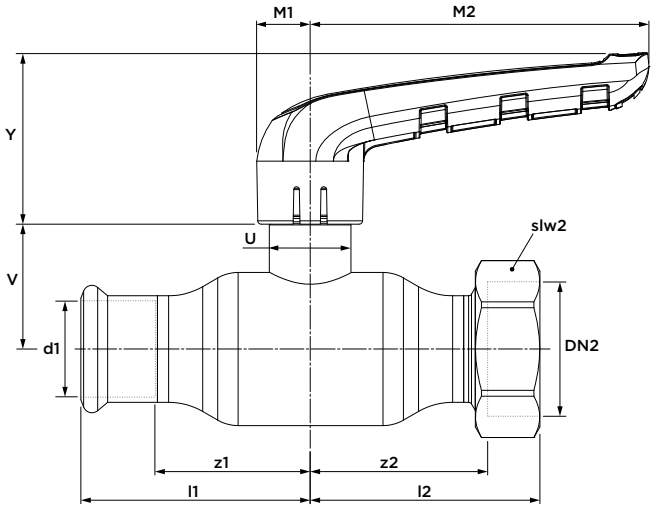

dimension		article no.	weight [kg]	Kvs [m³/h]	l1	l2	z1	z2	Y	M1	M2	V	U [Ø]	slw2
15 x G¾"	(DN10)	201 0001 410	0.22	13	47	59	28	49	38	12	75	26	18	27
18 x G¾"	(DN15)	201 5001 400	0.26	21.1	52	53	32	44	38	12	75	28	18	32
22 x G¾"	(DN20)	202 0001 410	0.28	37.1	61	72	41	62	38	12	75	31	18	32
28 x G1¼"	(DN25)	202 5001 400	0.65	65.5	68	67	46	55	50	15	100	37	24	46
35 x G1½"	(DN32)	203 2001 400	0.97	90.7	81	79	56	67	50	15	100	43	24	52
42 x G1¾"	(DN40)	204 0001 400	1.51	141.5	99	92	70	81	59	18	119	47	28	58
54 x G2¼"	(DN50)	205 0001 400	2.57	308.4	113	106	79	93	59	18	119	55	28	72

XPR21401 VSH XPress FullFlow Stainless ball valve with extended stem

(press x union nut)



specifications

- 100% full flow
- compact, one piece design
- max. pressure 16 bar
- operating temperature -35 to 135°C
- interchangeable coloured indentification clips
- M-profile

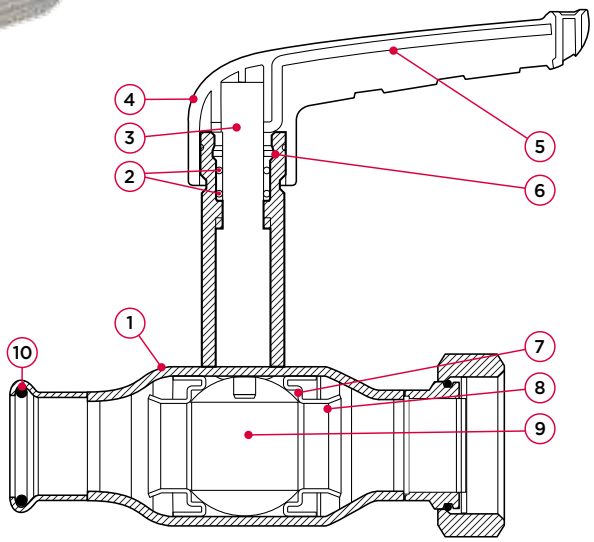

no.	component	material
1	valve housing	stainless steel (1.4401)
2	o-ring	EPDM
3	stem	stainless steel (1.4401)
4	handle	fiberglass reinforced nylon (PA66)
5	handle reinforcement	stainless steel (1.4401)
6	friction ring	PTFE
7	seal	PTFE
8	support ring	stainless steel (1.4401)
9	ball	stainless steel (1.4401)
10	o-ring	EPDM

maximum pressure [bar]

operating pressure	test pressure shell	test pressure seat
16	24	17.6

pressure equipment directive category	
all sizes	SEP

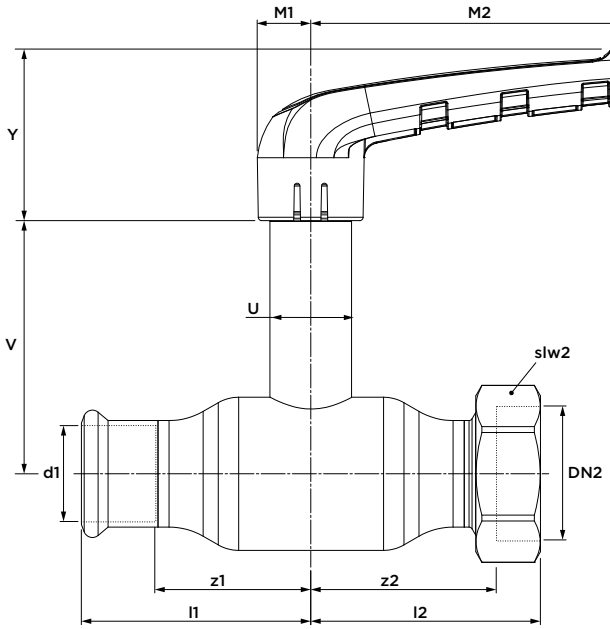

dimension		article no.	weight [kg]	Kvs [m³/h]	l1	l2	z1	z2	Y	M1	M2	V	U	slw2
15 x G¾"	(DN10)	201 0001 411	0.30	13	47	59	28	49	38	12	75	68	18	27
18 x G¾"	(DN15)	201 5001 401	0.35	21.1	52	53	32	44	38	12	75	70	18	32
22 x G¾"	(DN20)	202 0001 411	0.36	37.1	61	72	41	62	38	12	75	73	18	32
28 x G1¼"	(DN25)	202 5001 401	0.78	65.5	68	67	46	55	50	15	100	74	24	46
35 x G1½"	(DN32)	203 2001 401	1.11	90.7	81	79	56	67	50	15	100	80	24	52
42 x G1¾"	(DN40)	204 0001 401	1.73	141.5	99	92	70	81	59	18	119	98	28	58
54 x G2¼"	(DN50)	205 0001 401	2.79	308.4	113	106	79	93	59	18	119	106	28	72

PS500 VSH XPress ball valve

(2 x press)



specifications

- VSH XPress gunmetal ends for carbon steel, stainless steel and copper tube
- 100% full flow
- max. pressure 16 bar
- operating temperature -10 to 110°C
- blow-out and vandal proof assembly
- red lever handle

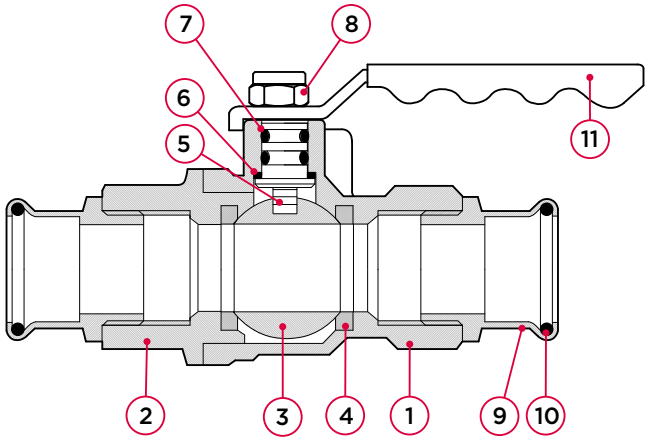

	component	material
1	body	forged brass (CW617N), chrome-plated
2	end piece	forged brass (CW617N), chrome-plated
3	ball	brass, chrome-plated
4	ball seat	PTFE
5	stem	brass
6	thrust washer	PTFE
7	stem o-ring	FPM
8	nut (self-locking)	zinc plated steel
9	end connection	gunmetal (CC499K)
10	o-ring	EPDM
11	lever handle	PVC insulated zinc plated steel

maximum pressure [bar]

operating pressure	test pressure shell	test pressure seat
16	24	17.6

pressure equipment directive category	
all sizes	SEP

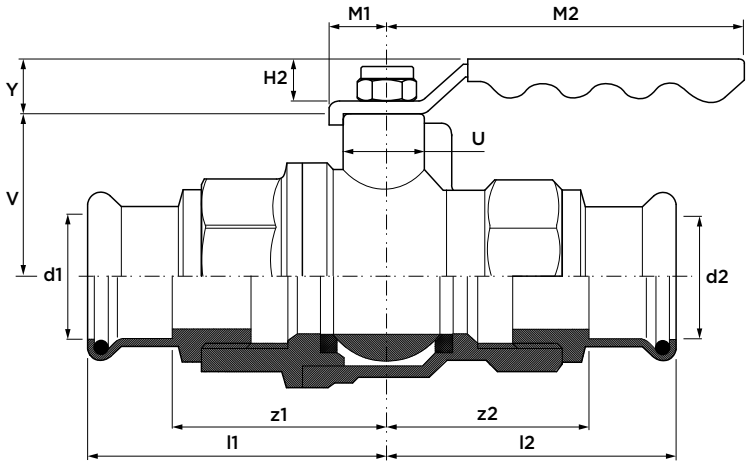

dimension	article no.	weight [kg]	Kvs [m³/h]	l1/l2	z1/z2	U [Ø]	V	Y	H2	M1	M2
15 (DN15)	242301	0.30	17	53	33	10	20	21	18	10	83
18 (DN15)	242302	0.32	17	53	33	10	20	21	18	10	94
22 (DN20)	242303	0.50	41	58	37	11	31	21	18	10	103
28 (DN25)	242304	0.76	70	66	43	12	35	22	19	10	115
35 (DN32)	242305	1.15	121	76	53	13	42	22	19	11	130
42 (DN40)	242306	1.61	200	83	55	14	57	23	20	11	135
54 (DN50)	242307	2.45	292	99	67	15	62	24	21	12	159

PS500T VSH XPress ball valve with T-handle

(2 x press)



specifications

- VSH XPress gunmetal ends for carbon steel, stainless steel and copper tube
- 100% full flow
- max. pressure 16 bar
- operating temperature -10 to 110°C
- blow-out and vandal proof assembly
- red T-handle

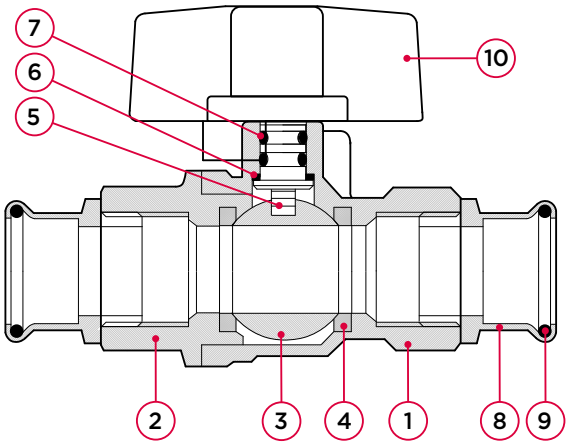

	component	material
1	body	forged brass (CW617N), chrome-plated
2	end piece	forged brass (CW617N), chrome-plated
3	ball	brass, chrome-plated
4	ball seat	PTFE
5	stem	brass bar
6	thrust washer	PTFE
7	stem o-ring	FPM
8	end connection	gunmetal (CC499K)
9	o-ring	EPDM
10	T-handle	aluminium, painted

maximum pressure [bar]

operating pressure	test pressure shell	test pressure seat
16	24	17.6

pressure equipment directive category

all sizes	SEP

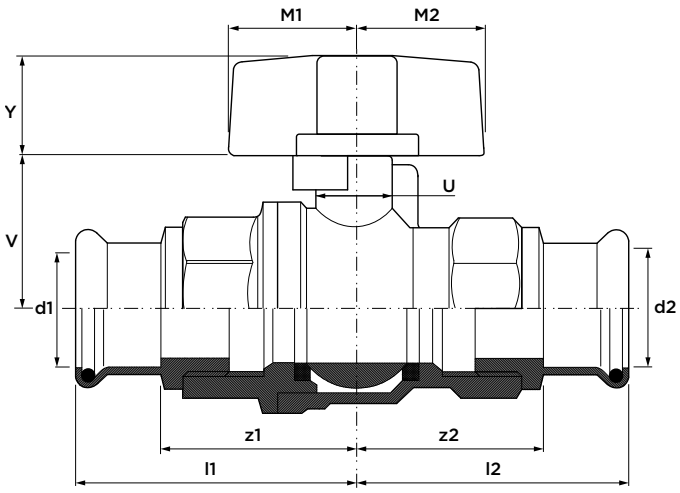

dimension		article no.	weight [kg]	Kvs [m³/h]	l1/l2	z1/z2	M1/M2	U [Ø]	V	Y
15	(DN15)	242301	0.27	17	53	33	25	10	20	18
18	(DN15)	242302	0.30	17	53	33	25	10	20	18
22	(DN20)	242303	0.47	41	58	37	25	11	31	18
28	(DN25)	242304	0.71	70	66	43	25	12	35	18

PSU500 VSH XPress ball valve

(2 x press, with union connection)



specifications

- VSH XPress gunmetal ends for carbon steel, stainless steel and copper tube
- 100% full flow
- max. pressure 16 bar
- operating temperature -10 to 110°C
- blow-out and vandal proof assembly
- red lever handle

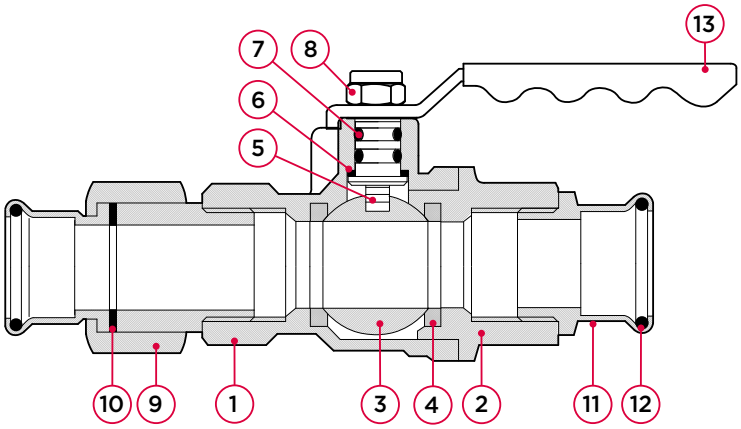

	component	material
1	body	forged brass (CW617N), chrome-plated
2	body cap	forged brass (CW617N), chrome-plated
3	ball	brass, chrome-plated
4	ball seat	PTFE
5	stem	brass
6	thrust washer	PTFE
7	stem o-ring	FPM
8	nut (self-locking)	zinc plated steel
9	union nut	gunmetal (CC499K)
10	flat seal	fiberring
11	end connection	gunmetal (CC499K)
12	o-ring	EPDM
13	lever handle	PVC insulated zinc plated steel

maximum pressure [bar]		
operating pressure	**test pressure shell**	**test pressure seat**
16	24	17.6

pressure equipment directive category	
all sizes	SEP

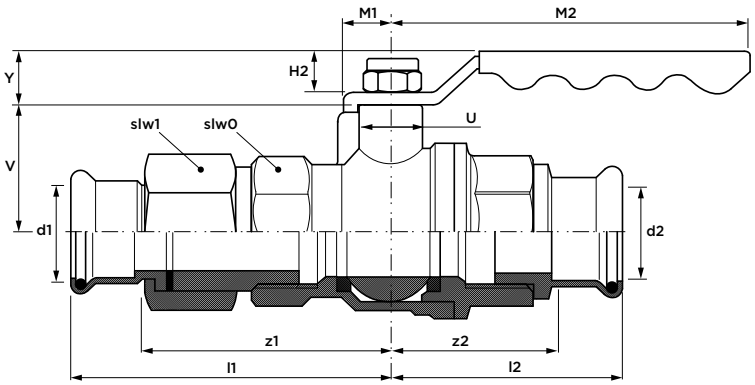

dimension		article no.	weight [kg]	Kvs [m³/h]	l1	l2	z1	z2	U [Ø]	V	Y	H2	M1	M2	slw0	slw1
15	(DN15)	243330	0.39	17	76	53	53	33	10	20	21	18	10	83	31	35
18	(DN15)	243331	0.39	17	76	53	53	33	10	20	21	18	10	94	31	35
22	(DN20)	243332	0.63	41	90	58	66	37	11	31	22	18	10	103	39	40
28	(DN25)	243333	0.96	70	95	66	69	43	12	35	22	19	10	115	46	52
35	(DN32)	243334	1.41	121	102	76	74	53	13	42	22	19	11	130	54	62
42	(DN40)	243335	1.91	200	113	83	80	55	14	57	23	20	11	135	62	70
54	(DN50)	243336	3.12	292	135	99	98	67	15	62	24	21	12	159	76	88

PSU500EL VSH XPress ball valve with extended stem

(2 x press, with union connection)



specifications

- VSH XPress gunmetal ends for carbon steel, stainless steel and copper tube
- 100% full flow
- max. pressure 16 bar
- operating temperature -10 to 110°C
- blow-out and vandal proof assembly
- red lever handle

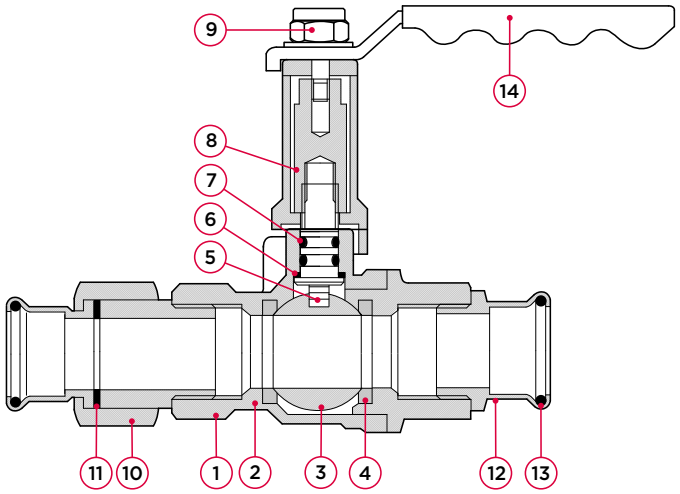

	component	material
1	body	forged brass (CW617N), chrome-plated
2	body cap	forged brass (CW617N), chrome-plated
3	ball	brass, chrome-plated
4	ball seat	PTFE
5	stem	brass
6	thrust washer	PTFE
7	stem o-ring	FPM
8	extended stem	brass
9	nut (self-locking)	zinc plated steel
10	union nut	gunmetal (CC499K)
11	flat seal	fiberring
12	end connection	gunmetal (CC499K)
13	o-ring	EPDM
14	lever handle	PVC insulated zinc plated steel

maximum pressure [bar]

operating pressure	test pressure shell	test pressure seat
16	24	17.6

pressure equipment directive category

all sizes	SEP

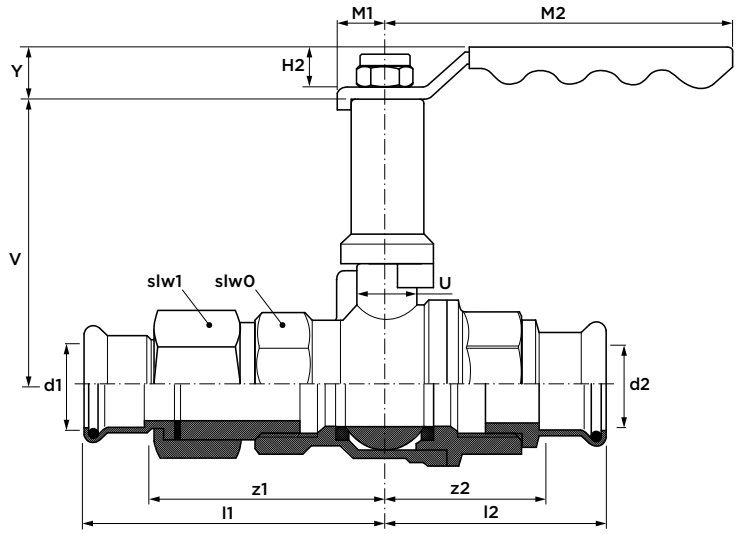

dimension		article no.	weight [kg]	Kvs [m3/h]	l1	l2	z1	z2	U [Ø]	V	Y	H2	M1	M2	slw0	slw1
15	(DN15)	243340	0.46	17	76	53	53	33	10	64	21	18	10	83	31	35
22	(DN20)	243342	0.74	41	90	58	66	37	11	78	21	18	10	103	39	40
28	(DN25)	243343	1.05	70	95	66	69	43	12	90	22	19	10	115	46	52
35	(DN32)	243344	1.50	121	102	76	74	53	13	88	22	19	11	130	54	62
42	(DN40)	243345	2.08	200	113	83	80	55	14	107	23	20	11	135	62	70
54	(DN50)	243346	3.34	292	135	99	98	67	15	124	24	21	12	159	76	88

PS550 VSH XPress ball valve, DZR

(2 x press)



specifications

- VSH XPress gunmetal ends for carbon steel, stainless steel and copper tube
- 100% full flow
- max. pressure 16 bar
- operating temperature -10 to 110°C
- blow-out and vandal proof assembly
- blue lever handle

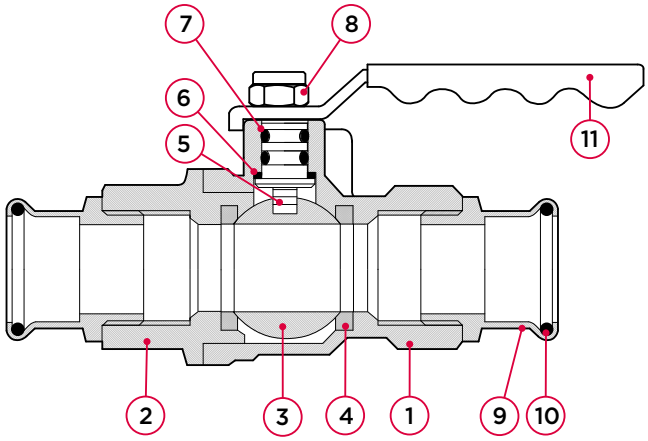

	component	material
1	body	DZR brass (CW602N)
2	body cap	DZR brass (CW602N)
3	ball	brass, chrome-plated
4	ball seat	PTFE
5	stem	DZR brass (CW602N)
6	thrust washer	PTFE
7	stem o-ring	FPM
8	nut (self-locking)	zinc plated steel
9	end connection	gunmetal (CC499K)
10	o-ring	EPDM
11	lever handle	PVC insulated zinc plated steel

maximum pressure [bar]

operating pressure	test pressure shell	test pressure seat
16	24	17.6

pressure equipment directive category	
all sizes	SEP

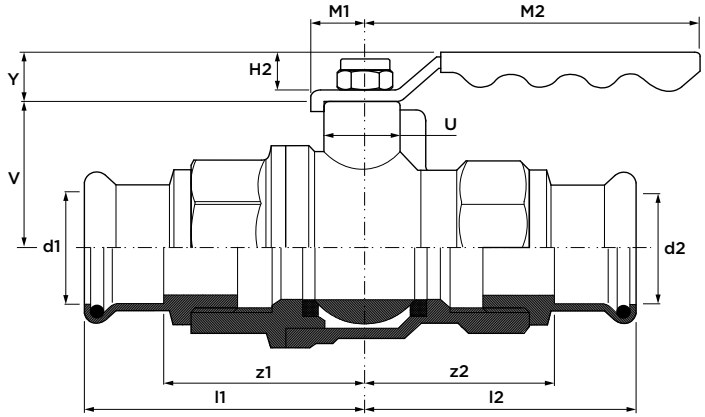

dimension	article no.	weight [kg]	Kvs [m³/h]	l1/l2	z1/z2	U [Ø]	V	Y	H2	M1	M2
15 (DN15)	245220	0.30	17	53	33	10	20	21	18	10	83
18 (DN15)	245221	0.30	17	53	33	10	20	21	18	10	94
22 (DN20)	245222	0.50	41	58	37	11	31	21	18	10	103
28 (DN25)	245223	0.75	70	66	43	12	35	22	19	10	115
35 (DN32)	245224	1.33	121	76	53	13	42	22	19	11	130
42 (DN40)	245225	1.71	200	83	55	14	57	23	20	11	135
54 (DN50)	245226	2.53	292	99	67	15	62	24	21	12	159

PS550T VSH XPress ball valve with T-handle, DZR

(2 x press)



specifications

- VSH XPress gunmetal ends for carbon steel, stainless steel and copper tube
- 100% full flow
- max. pressure 16 bar
- operating temperature -10 to 110°C
- blow-out and vandal proof assembly
- blue T-handle

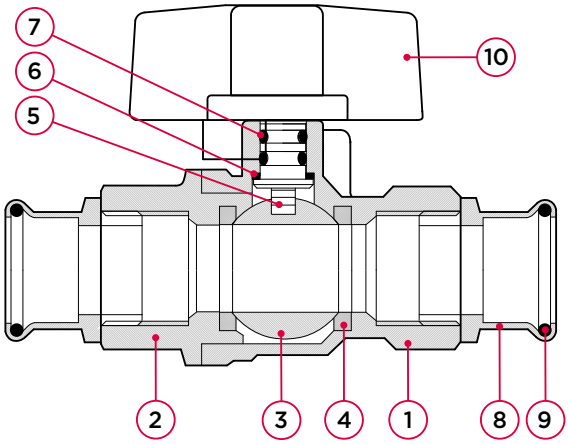

	component	material
1	body	DZR brass (CW602N)
2	body cap	DZR brass (CW602N)
3	ball	brass, chrome-plated
4	ball seat	PTFE
5	stem	DZR brass (CW602N)
6	thrust washer	PTFE
7	stem o-ring	FPM
8	end connection	gunmetal (CC499K)
9	o-ring	EPDM
10	T-handle	aluminium, painted

maximum pressure [bar]

operating pressure	test pressure shell	test pressure seat
16	24	17.6

pressure equipment directive category	
all sizes	SEP

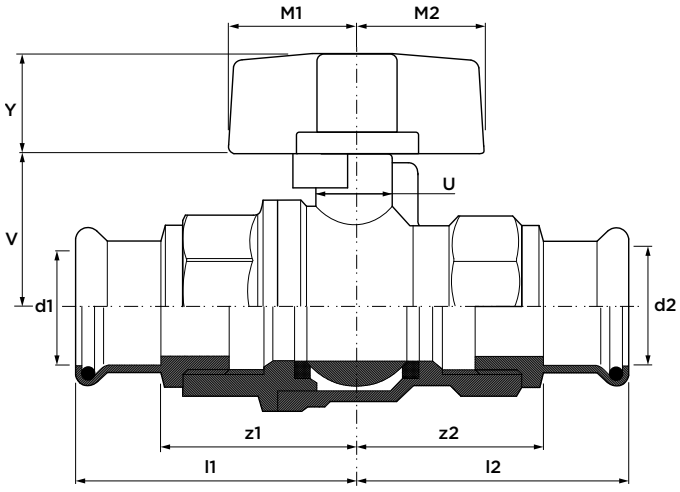

dimension		article no.	weight [kg]	Kvs [m³/h]	l1/l2	z1/z2	M1/M2	U [Ø]	V	Y
15	(DN15)	245230	0.28	17	53	33	25	10	20	18
22	(DN20)	245232	0.47	41	58	37	25	11	31	18
28	(DN25)	245233	0.75	70	66	43	25	12	35	18

PS550EL VSH XPress ball valve with extended stem, DZR

(2 x press)



specifications

- VSH XPress gunmetal ends for carbon steel, stainless steel and copper tube
- 100% full flow
- max. pressure 16 bar
- operating temperature -10 to 110°C
- blow-out and vandal proof assembly
- blue lever handle

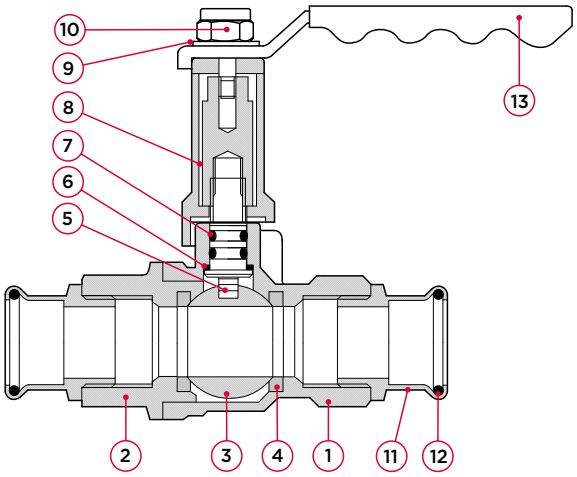

no.	component	material
1	body	DZR brass (CW602N)
2	body cap	DZR brass (CW602N)
3	ball	Brass, chrome-plated
4	ball seat	PTFE
5	stem	DZR brass
6	thrust washer	nickel-plated brass
7	stem o-ring	FPM
8	extended stem	brass
9	washer	brass
10	nut (self-locking)	zinc plated steel
11	end connection	gunmetal (CC499K)
12	o-ring	EPDM
13	lever handle	PVC insulated zinc plated steel

maximum pressure [bar]		
operating pressure	**test pressure shell**	**test pressure seat**
16	24	17.6

pressure equipment directive category	
all sizes	SEP

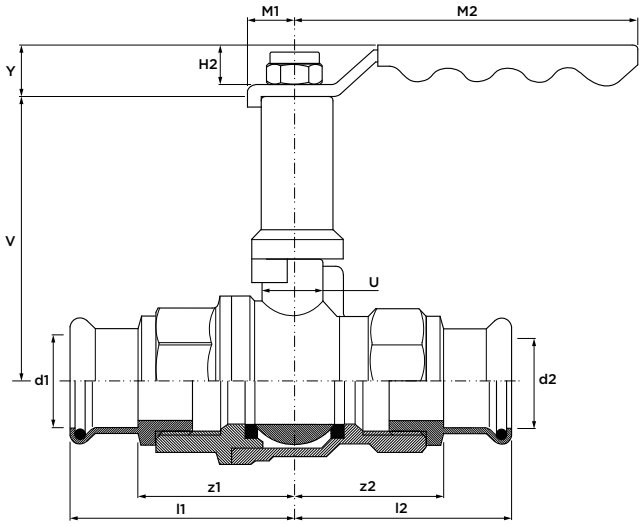

dimension	article no.	weight [kg]	Kvs [m³/h]	l1/l2	z1/z2	U [Ø]	V	Y	H2	M1	M2
15 (DN15)	245300	0.37	17	53	33	10	64	21	18	10	83
18 (DN15)	245301	0.37	17	53	33	10	64	21	18	10	94
22 (DN20)	245302	0.60	41	58	37	11	78	21	19	10	103
28 (DN25)	245303	0.87	70	66	43	12	81	22	19	10	115
35 (DN32)	245304	1.52	121	76	48	13	88	22	20	11	130
42 (DN40)	245305	1.77	200	82	50	14	107	23	20	11	135
54 (DN50)	245306	2.81	292	99	62	15	124	24	21	12	159

PSU550 VSH XPress ball valve, DZR

(2 x press, with union connection)



specifications

- VSH XPress gunmetal ends for carbon steel, stainless steel and copper tube
- 100% full flow
- max. pressure 16 bar
- operating temperature -10 to 110°C
- blow-out and vandal proof assembly
- blue lever handle

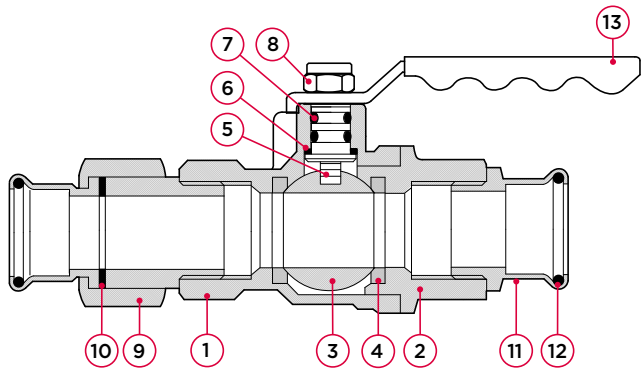

no.	component	material
1	body	DZR brass (CW602N)
2	body cap	DZR brass (CW602N)
3	ball	brass, chrome-plated
4	ball seat	PTFE
5	stem	DZR brass
6	thrust washer	PTFE
7	stem o-ring	FPM
8	nut (self-locking)	zinc plated steel
9	union nut	DZR brass
10	flat seal	fiberring
11	end connection	gunmetal (CC499K)
12	o-ring	EPDM
13	lever handle	PVC insulated zinc plated steel

maximum pressure [bar]		
operating pressure	**test pressure shell**	**test pressure seat**
16	24	17.6

pressure equipment directive category	
all sizes	SEP

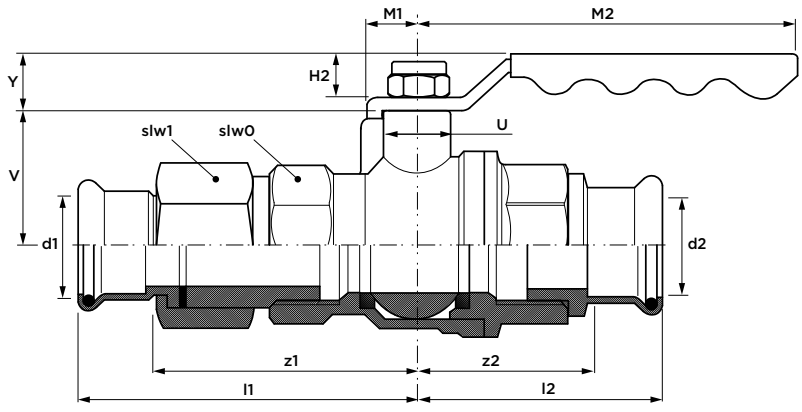

dimension		article no.	weight [kg]	Kvs [m³/h]	l1	l2	z1	z2	U [Ø]	V	Y	H2	M1	M2	slw0	slw1
15	(DN15)	245310	0.39	17	76	53	53	33	10	20	21	18	10	83	31	35
18	(DN15)	245311	0.39	17	76	53	53	33	10	20	21	18	10	94	31	35
22	(DN20)	245312	0.63	41	90	58	66	37	11	31	21	19	10	103	39	40
28	(DN25)	245313	0.96	70	95	66	69	43	12	35	22	19	10	115	46	52
35	(DN32)	245314	1.41	121	102	76	74	53	13	42	22	19	11	130	54	62
42	(DN40)	245315	1.91	200	113	83	80	55	14	57	23	20	11	135	62	70
54	(DN50)	245316	3.11	292	135	99	98	67	15	62	24	21	12	159	76	88

PSU550EL VSH XPress ball valve with extended stem, DZR

(2 x press, with union connection)



specifications

- VSH XPress gunmetal ends for carbon steel, stainless steel and copper tube
- 100% full flow
- max. pressure 16 bar
- operating temperature -10 to 110°C
- blow-out and vandal proof assembly
- blue lever handle

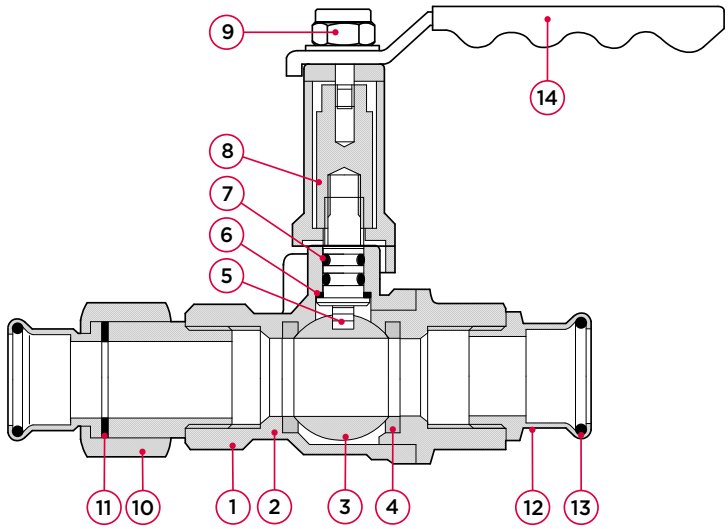

no.	component	material
1	body	DZR brass (CW602N)
2	body cap	DZR brass (CW602N)
3	ball	brass, chrome-plated
4	ball seat	PTFE
5	stem	DZR brass
6	thrust washer	PTFE
7	stem o-ring	FPM
8	extended stem	brass
9	nut (self-locking)	zinc plated steel
10	union nut	DZR brass
11	flat seal	fiberring
12	end connection	gunmetal (CC499K)
13	o-ring	EPDM
14	lever handle	PVC insulated zinc plated steel

maximum pressure [bar]		
operating pressure	**test pressure shell**	**test pressure seat**
16	24	17.6

pressure equipment directive category	
all sizes	SEP

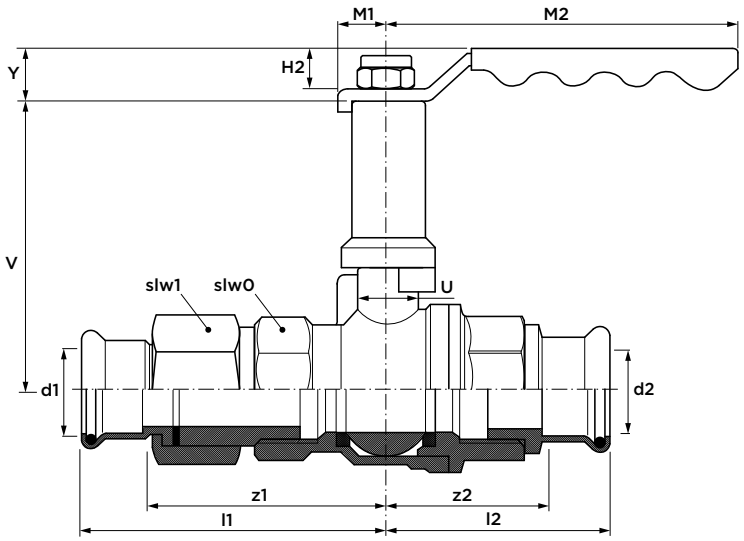

dimension	article no.	weight [kg]	Kvs [m3/h]	l1	l2	z1	z2	U [Ø]	V	Y	H2	M1	M2	slw0	slw1
15 (DN15)	245320	0.46	17	76	53	53	33	10	64	21	18	10	83	31	35
18 (DN15)	245321	0.46	17	76	53	53	33	10	64	21	18	10	94	31	35
22 (DN20)	245322	0.74	41	90	58	66	37	11	78	22	18	10	103	39	45
28 (DN25)	245323	1.05	70	95	66	69	43	12	81	22	19	10	115	46	52
35 (DN32)	245324	1.57	121	102	76	74	53	13	90	22	19	11	130	54	62
42 (DN40)	245325	2.08	200	113	83	80	55	14	107	23	20	11	135	62	70
54 (DN50)	245326	3.34	292	135	99	98	67	15	124	24	21	12	159	76	88

PSU1060A VSH XPress swing check valve

(2 x press, with union connection)



specifications

- max. pressure 16 bar
- operating temperature -10 to 86°C
- VSH XPress gunmetal ends for carbon steel, stainless steel and copper tube
- metal seat and swing type metal disk
- horizontal or vertical fixing (upward flow only)
- body arrow indicates direction of flow
- with inspection point

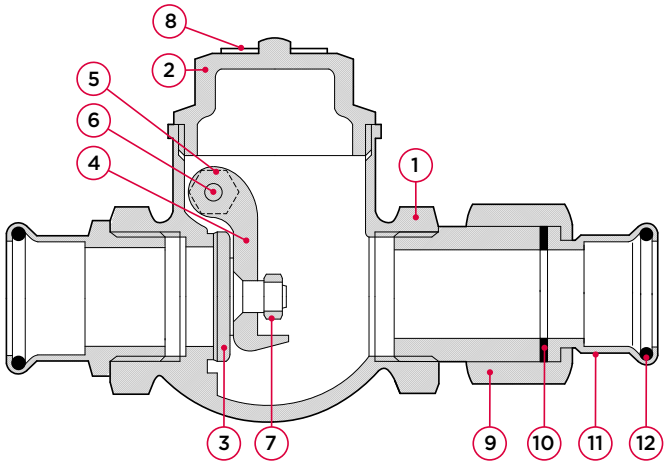

no.	component	material
1	body	gunmetal (C83600)
2	body cap	forged brass (CW617N)
3	valve	gunmetal (C83600)
4	swinger	brass/gunmetal (CW614N)
5	swinger pin cap	brass (CW614N)
6	swinger pin	brass (CW614N)
7	nut	brass (CW614N)
8	rating disk	tinned iron sheet
9	union nut	gunmetal (CC499K)
10	flat seal	fiberring
11	end connection	gunmetal (CC499K)
12	o-ring	EPDM

maximum pressure [bar]

operating pressure	test pressure shell	test pressure seat
16	24	17.6

pressure equipment directive category

all sizes	SEP

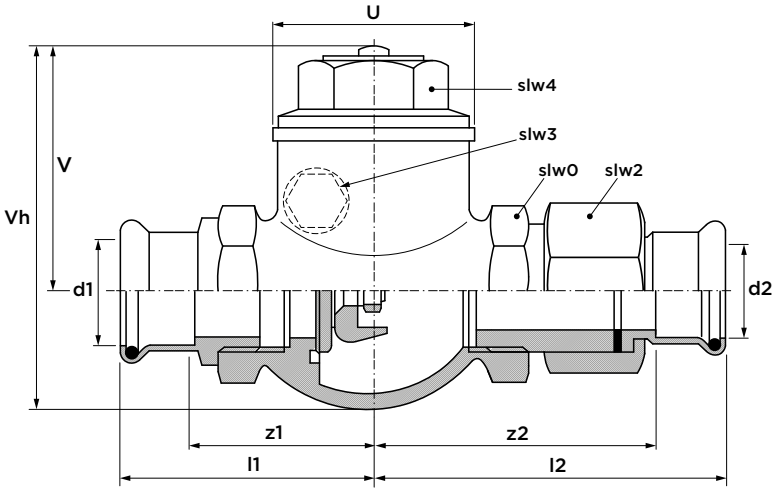

flow rate

dimension	flow [l/s]	Kv [m³/h]	flow [l/s]	Kv [m³/h]
15 (DN12)	0.04	1.80	1.02	5.10
	0.10	3.70	0.04	5.70
22 (DN20)	0.04	2.70	0.40	13.60
	0.10	5.50	1.00	15.30
28 (DN25)	0.01	7.70	0.30	18.40
	0.20	13.90	1.00	25.30
35 (DN32)	0.20	15.00	0.40	25.30
	0.30	26.60	1.00	32.60
42 (DN40)	0.40	30.30	0.80	48.50
	0.60	40.20	3.00	54.40
54 (DN50)	0.60	42.00	1.50	86.20
	0.80	54.00	4.00	98.00

dimension	article no.	weight [kg]	Kvs [m³/h]	l1	l2	z1	z2	U [Ø]	Vh	V	slw0	slw2	slw3	slw4
15 (DN12)	122310	0.56	5.7	54	77	36	54	32	62	62	22	26	8	26
22 (DN20)	122312	0.84	15.3	62	93	43	69	41	77	77	28	33	8	33
28 (DN25)	122313	1.21	25.3	68	97	47	71	48	86	86	34	40	8	40
35 (DN32)	122314	1.74	32.6	76	102	52	73	58	96	96	41	48	8	48
42 (DN40)	122315	2.17	54.4	85	115	58	83	67	110	110	48	56	8	56
54 (DN50)	122316	3.50	98.0	100	134	68	97	82	134	134	59	69	8	69

PS4426 VSH XPress double check valve

(2 x press)



specifications

- max. pressure 10 bar
- operating temperature 0 to 65 °C
- VSH XPress gunmetal ends for carbon steel, stainless steel and copper tube
- springlock
- functions in any installed direction
- with inspection point
- space saving construction

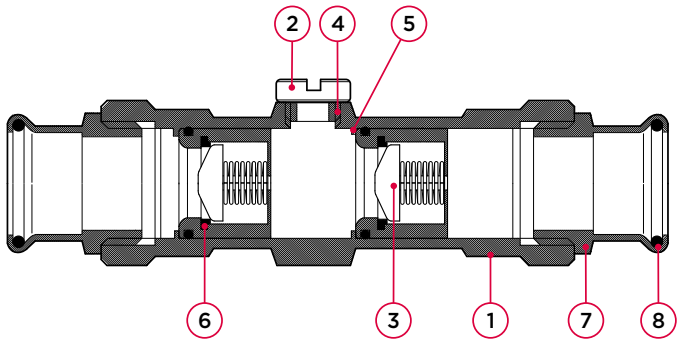

no.	component	material
1	body	DZR brass
2	inspection point	DZR brass
3	non return valve	POM/stainless/NBR
4	seal	brass
5	retaining ring	brass
6	o-ring	NBR
7	end connection	gunmetal (CC499K)
8	o-ring	EPDM

maximum pressure [bar]

operating pressure	test pressure shell	test pressure seat
16	24	17.6

pressure equipment directive category	
all sizes	SEP

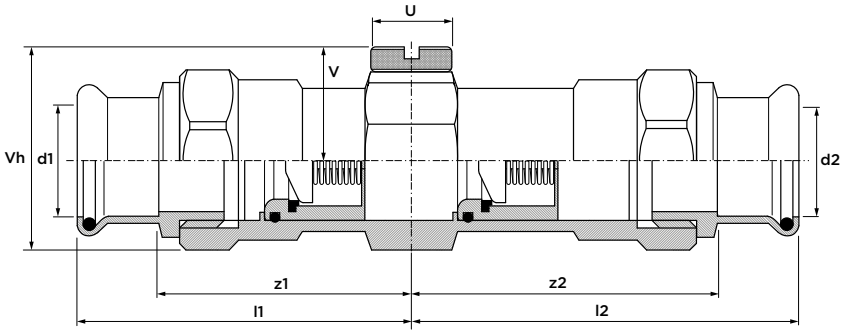

dimension	article no.	weight [kg]	l1	l2	z1	z2	U [Ø]	Vh	V
15 (DN12)	42050	0.22	59	65	41	47	16	31	18
22 (DN20)	42051	0.33	66	73	46	53	16	36	21
28 (DN25)	42052	0.52	74	83	53	62	17	44	24
35 (DN32)	42053	0.82	89	95	65	71	19	52	29
42 (DN40)	42054	1.14	107	108	79	80	19	60	33
54 (DN50)	42055	1.97	136	138	102	104	19	71	38

PSU4426 VSH XPress double check valve

(2 x press, with union connection)



specifications

- max. pressure 10 bar
- operating temperature 0 to 65 °C
- VSH XPress gunmetal ends for carbon steel, stainless steel and copper tube
- springlock
- functions in any installed direction
- with inspection point
- space saving construction

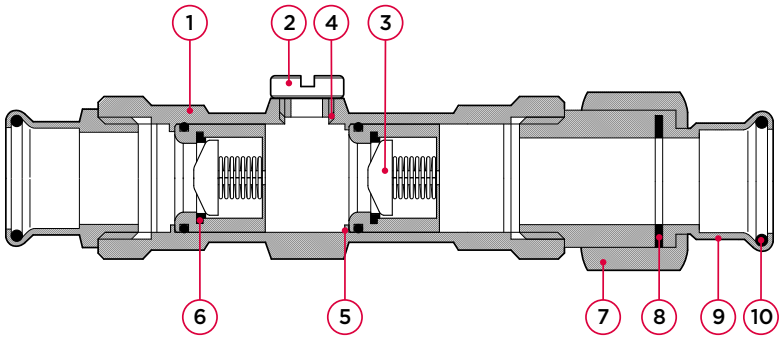

no.	component	material
1	body	DZR brass
2	inspection point	DZR brass
3	non return valve	POM/stainless/NBR
4	seal	brass
5	retaining ring	brass
6	o-ring	NBR
7	union nut	gunmetal (CC499K)
8	flat seal	fiberring
9	end connection	gunmetal (CC499K)
10	o-ring	EPDM

maximum pressure [bar]

operating pressure	test pressure shell	test pressure seat
16	24	17.6

pressure equipment directive category	
all sizes	SEP

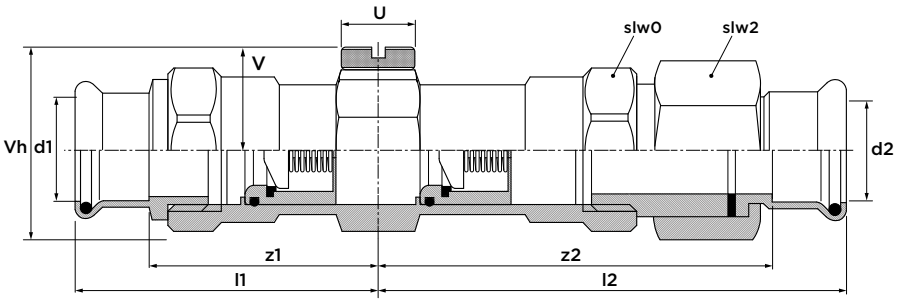

dimension	article no.	weight [kg]	l1	l2	z1	z2	U [Ø]	Vh	V	slw0	slw2
15 (DN12)	42082	0.32	67	96	49	76	32	33	18	26	30
18 (DN15)	42083	0.32	67	101	48	76	33	33	18	26	30
22 (DN20)	42084	0.47	77	115	58	89	38	39	21	31	37
28 (DN25)	42085	0.77	89	126	68	103	47	47	24	39	46
35 (DN32)	42086	1.07	100	131	76	108	40	55	29	47	52
42 (DN40)	42087	1.57	115	145	87	110	32	61	33	53	58
54 (DN50)	42088	2.50	153	188	119	147	50	76	38	66	75

PS913 VSH XPress y-strainer

(2 x press)



specifications

- max. pressure 16 bar
- operating temperature -10 to 110°C
- VSH XPress gunmetal ends for carbon steel, stainless steel and copper tube
- stainless steel 0.92 mm aperture mesh
- high effective protection from system debris

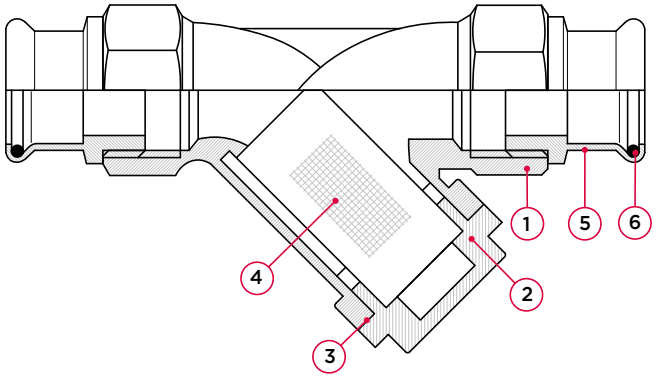

no.	component	material
1	body	gunmetal (C83600)
2	body cap	gunmetal (C35200)
3	gasket	PTFE
4	mesh	stainless steel (1.4301)
5	end connection	gunmetal (CC499K)
6	o-ring	EPDM

maximum pressure [bar]

operating pressure	test pressure shell	test pressure seat
16	24	17.6

pressure equipment directive category	
all sizes	SEP

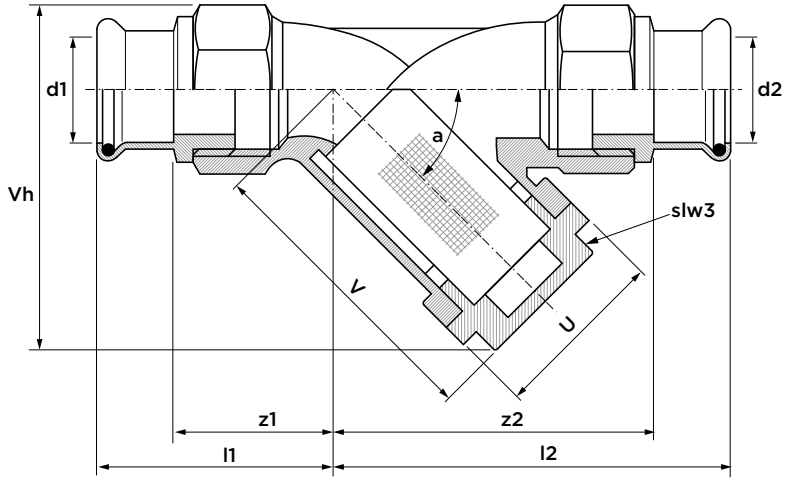

dimension	article no.	weight [kg]	l1	l2	z1	z2	U [ø]	V	Vh	slw3	a [°]
15 (DN12)	15472	0.30	46	63	28	45	26	54	59	19	45
18 (DN15)	15473	0.30	46	63	28	45	26	54	59	22	45
22 (DN20)	15474	0.41	48	67	29	48	34	61	71	25	45
28 (DN25)	15475	0.59	54	78	33	57	41	75	86	30	45
35 (DN32)	15476	0.96	66	105	43	81	48	86	101	36	45
42 (DN40)	15477	1.19	73	112	46	84	56	100	117	42	45
54 (DN50)	15478	2.00	84	128	52	95	70	96	125	52	45

PSU913 VSH XPress y-strainer

(2 x press, with union connection)



specifications

- max. pressure 16 bar
- operating temperature -10 to 110°C
- VSH XPress gunmetal ends for carbon steel, stainless steel and copper tube
- stainless steel 0.92 mm aperture mesh
- high effective protection from system debris

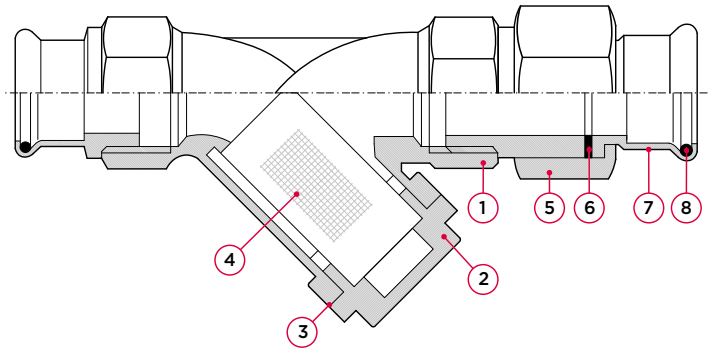

no.	component	material
1	body	gunmetal (C83600)
2	body cap	gunmetal (C35200)
3	gasket	PTFE
4	mesh	stainless steel (1.4301)
5	union nut	gunmetal (CC499K)
6	flat seal	fiberring
7	end connection	gunmetal (CC499K)
8	o-ring	EPDM

maximum pressure [bar]

operating pressure	test pressure shell	test pressure seat
16	24	17.6

pressure equipment directive category	
all sizes	SEP

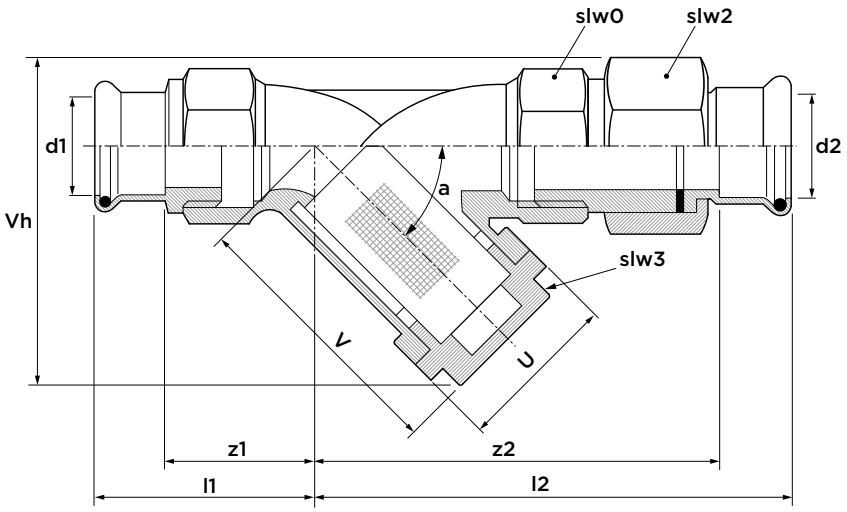

dimension	article no.	weight [kg]	l1	l2	z1	z2	Vh	U [ø]	V	slw0	slw2	slw3	a [°]
15 (DN12)	15437	0.36	46	86	28	63	59	26	54	29	31	19	45
22 (DN20)	15439	0.52	48	98	29	74	71	34	61	38	41	25	45
28 (DN25)	15440	0.85	54	107	33	81	86	41	75	45	49	30	45
35 (DN32)	15441	1.18	66	131	43	102	101	48	86	54	58	36	45
42 (DN40)	15442	1.57	73	142	46	106	117	56	100	63	68	42	45
54 (DN50)	15443	2.48	84	162	52	124	125	70	96	78	84	52	45

PS1260 VSH XPress commissioning valve

(2 x press)



specifications

- max. pressure 16 bar
- operating temperature -10 to 110°C
- VSH XPress gunmetal ends for carbon steel, stainless steel and copper tube
- time saving through fixed orifice measuring (FODRV)
- handle with digital position indicator
- memory stop for setting fixation
- test points for needle connection

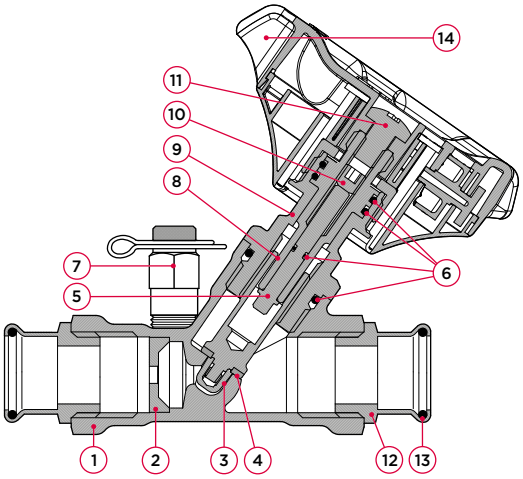

no.	component	material
1	body	brass (CW511L)
2	orifice plate	brass (CW511L)
3	disc	brass (CW511L)
4	disc seal	PTFE
5	gland	packing piece brass (CW511L)
6	o-rings	EPDM
7	test points	DZR brass (CW602N)
8	spindle	brass (CW511L)
9	bonnet	brass (CW511L)
10	adjustment screw	steel
11	set screw	steel
12	end connection	gunmetal (CC499K)
13	o-ring	EPDM
14	handle	30% glass filled PA 66

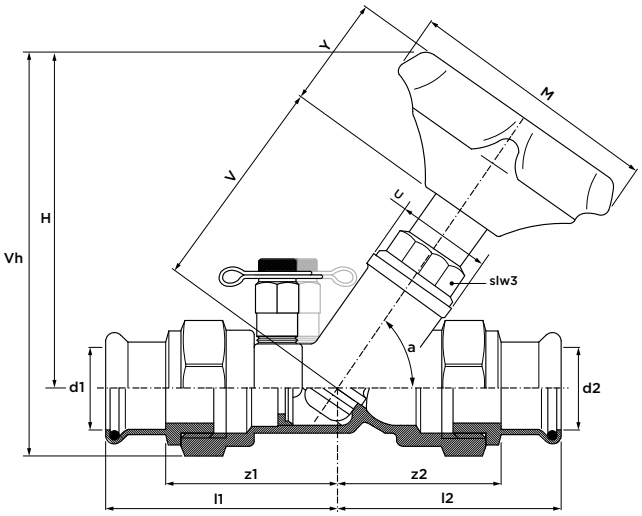

maximum pressure [bar]		
operating pressure	**test pressure shell**	**test pressure seat**
16	24	17.6

pressure equipment directive category	
all sizes	SEP

dimension		article no.	weight [kg]	l1/l2	z1/z2	U [Ø]	V	Y	M	Vh	H	a [°]	slw3
15	(DN15) ULF	126610	0.64	62	44	26	64	38	89	118	104	55	25
15	(DN15) LF	126611	0.68	62	44	26	64	38	89	118	104	55	25
15	(DN15) MF	126612	0.62	62	44	26	64	38	89	118	104	55	25
15	(DN15) SF	126613	0.65	62	44	26	64	38	89	118	104	55	25
18	(DN15) LF	126614	0.60	62	44	26	64	38	89	118	104	55	25
18	(DN15) SF	126615	0.60	62	44	26	64	38	89	118	104	55	25
22	(DN20) SF	126616	0.74	43	33	26	64	38	89	125	109	55	27
28	(DN25) SF	126617	1.07	44	34	30	70	38	89	128	109	55	32
35	(DN32) SF	126618	1.54	61	47	42	82	38	89	148	123	55	38
42	(DN40) SF	126619	1.91	64	50	50	85	38	89	153	126	55	42
54	(DN50) SF	126620	2.99	79	66	57	103	38	89	175	141	55	43

dimension		Kv [m³/h]	Kvs [m³/h]	flow [l/s] min.	flow [l/s] max.	flow [l/min] min.	flow [l/min] max.	flow [l/h] min.	flow [l/h] max.
15	(DN15) ULF	0.19	0.18	0.008	0.016	0.45	0.96	27.3	56.1
15	(DN15) LF	0.40	0.41	0.015	0.031	0.90	1.86	54.8	110.6
15	(DN15) MF	0.99	1.00	0.030	0.061	1.80	3.66	107.9	219.8
15	(DN15) SF	1.86	2.15	0.058	0.126	3.50	7.56	209.3	452.7
18	(DN15) LF	0.40	0.41	0.015	0.031	0.90	1.86	54.8	110.6
18	(DN15) SF	1.86	2.15	0.058	0.126	3.50	7.56	209.3	452.7
22	(DN20) SF	2.27	4.78	0.123	0.191	7.38	11.46	442.6	687.0
28	(DN25) SF	6.11	8.11	0.172	0.377	10.32	22.62	619.4	1356.8
35	(DN32) SF	12.65	15.41	0.365	0.690	21.90	41.40	1313.4	2482.7
42	(DN40) SF	19.00	22.23	0.625	1.383	37.50	82.98	2248.9	4977.2
54	(DN50) SF	28.42	48.21	1.179	1.751	70.80	105.06	4246.1	6304.5

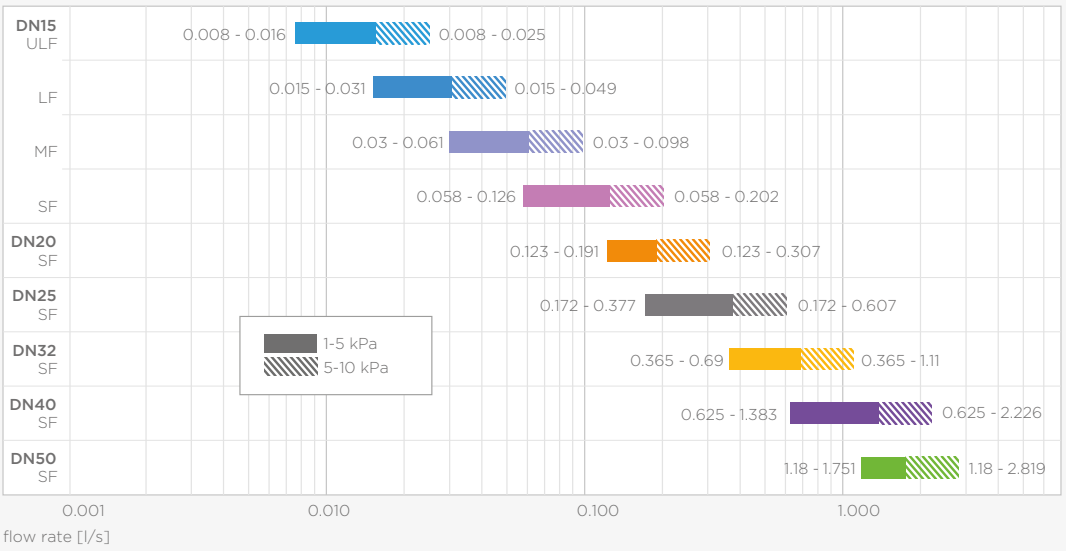

flow rate

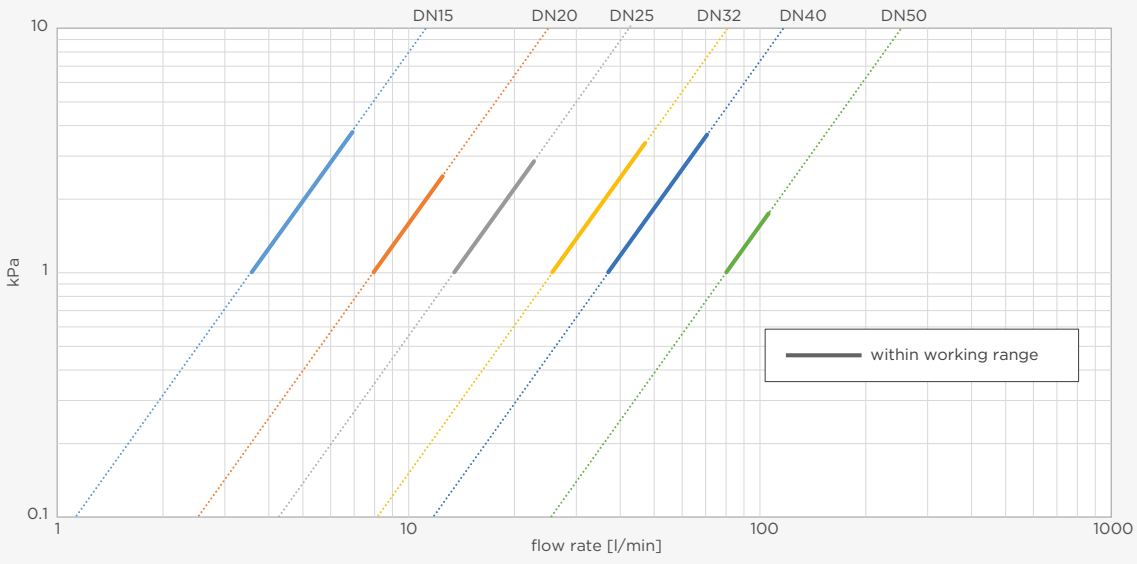

pressure loss

PSU1260 VSH XPress commissioning valve

(2 x press, with union connection, inlet)



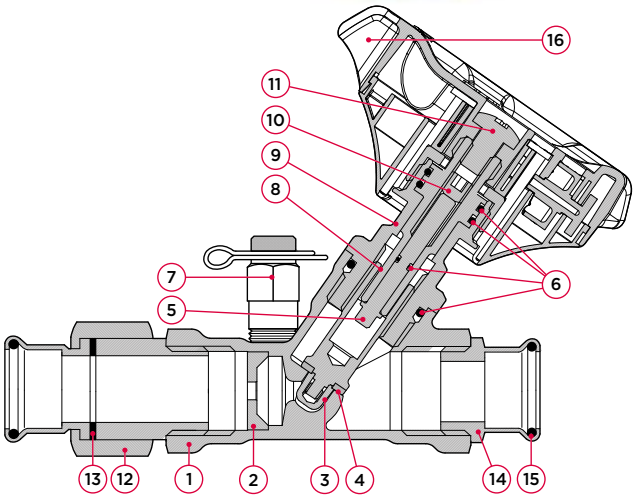

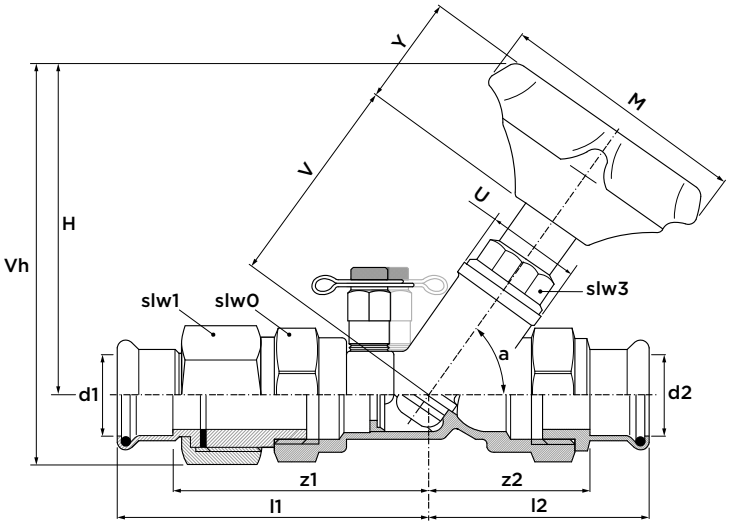

specifications

- part of the VSH XPress system
- max. pressure 16 bar
- operating temperature -10 to 110°C
- VSH XPress gunmetal ends for carbon steel, stainless steel and copper tube
- time saving through fixed orifice measuring (FODRV)
- handle with digital position indicator
- memory stop for setting fixation
- test points for needle connection

	component	material
1	body	brass (CW511L)
2	orifice plate	brass (CW511L)
3	disc	brass (CW511L)
4	disc seal	PTFE
5	gland	packing piece brass (CW617N)
6	o-rings	EPDM
7	test points	DZR brass
8	spindle	brass (CW511L)
9	bonnet	brass (CW511L)
10	adjustment screw	steel
11	set screw	steel
12	union nut	gunmetal (CC499K)
13	flat seal	fiberring
14	end connection	gunmetal (CC499K)
15	o-ring	EPDM
16	handle	30% glass filled PA 66

maximum pressure [bar]

operating pressure	test pressure shell	test pressure seat
16	24	17.6

pressure equipment directive category

all sizes	SEP

dimension			article no.	weight [kg]	l1	l2	z1	z2	U [Ø]	V	Y	M	Vh	H	slw0	slw1	slw3	a [°]
15	(DN15)	ULF	126293	0.70	89	66	69	48	26	64	38	89	125	109	30	32	25	55
15	(DN15)	LF	126247	0.70	89	66	69	48	26	64	38	89	125	109	30	32	25	55
15	(DN15)	MF	126291	0.70	89	66	69	48	26	64	38	89	125	109	30	32	25	55
15	(DN15)	SF	126248	0.69	89	66	69	48	26	64	38	89	125	109	30	32	25	55
18	(DN15)	ULF	126297	0.70	89	66	69	48	26	64	38	89	125	109	30	32	25	55
18	(DN15)	LF	126249	0.70	89	66	69	48	26	64	38	89	125	109	30	32	25	55
18	(DN15)	MF	126295	0.70	89	66	69	48	26	64	38	89	125	109	30	32	25	55
18	(DN15)	SF	126250	0.69	89	66	69	48	26	64	38	89	125	109	30	32	25	55
22	(DN20)	SF	126251	0.82	67	98	48	72	26	64	38	89	125	109	37	32	27	55
28	(DN25)	SF	126252	1.25	74	102	53	79	30	70	38	89	133	114	46	39	32	55
35	(DN32)	SF	126253	1.75	89	115	65	93	42	82	38	89	148	123	52	50	38	55
42	(DN40)	SF	126254	2.26	96	126	68	91	50	85	38	89	153	126	58	55	42	55
54	(DN50)	SF	126255	3.87	117	150	83	109	57	103	38	89	175	141	75	70	43	55

dimension		Kv [m³/h]	Kvs [m³/h]	flow [l/s] min.	flow [l/s] max.	flow [l/min] min.	flow [l/min] max.	flow [l/h] min.	flow [l/h] max.
15	(DN15) ULF	0.19	0.18	0.008	0.016	0.45	0.96	27.3	56.1
15	(DN15) LF	0.40	0.41	0.015	0.031	0.90	1.86	54.8	110.6
15	(DN15) MF	0.99	1.00	0.030	0.061	1.80	3.66	107.9	219.8
15	(DN15) SF	1.86	2.15	0.058	0.126	3.50	7.56	209.3	452.7
18	(DN15) LF	0.40	0.41	0.015	0.031	0.90	1.86	54.8	110.6
18	(DN15) SF	1.86	2.15	0.058	0.126	3.50	7.56	209.3	452.7
22	(DN20) SF	2.27	4.78	0.123	0.191	7.38	11.46	442.6	687.0
28	(DN25) SF	6.11	8.11	0.172	0.377	10.32	22.62	619.4	1356.8
35	(DN32) SF	12.65	15.41	0.365	0.690	21.90	41.40	1313.4	2482.7
42	(DN40) SF	19.00	22.23	0.625	1.383	37.50	82.98	2248.9	4977.2
54	(DN50) SF	28.42	48.21	1.179	1.751	70.80	105.06	4246.1	6304.5

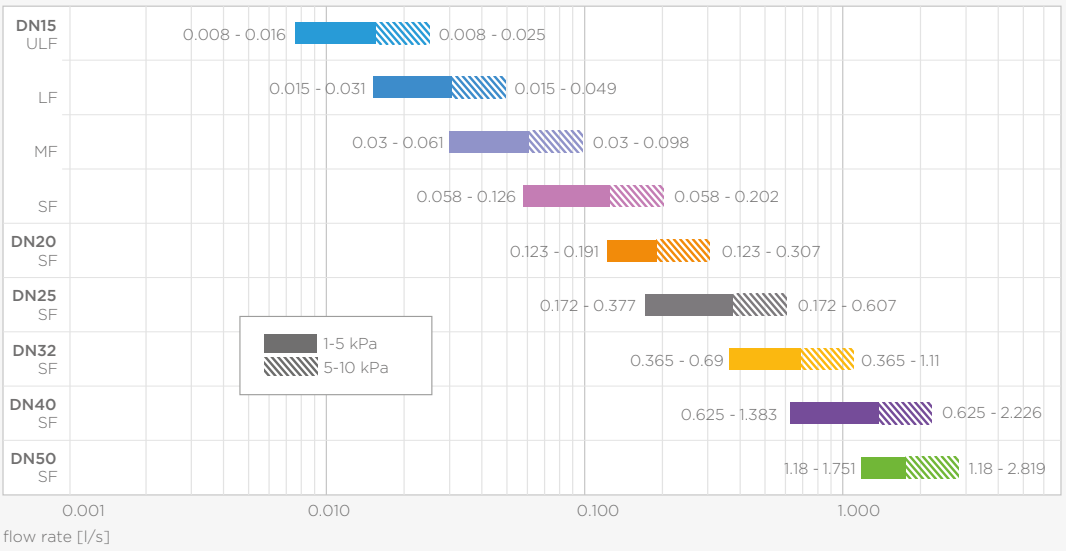

flow rate

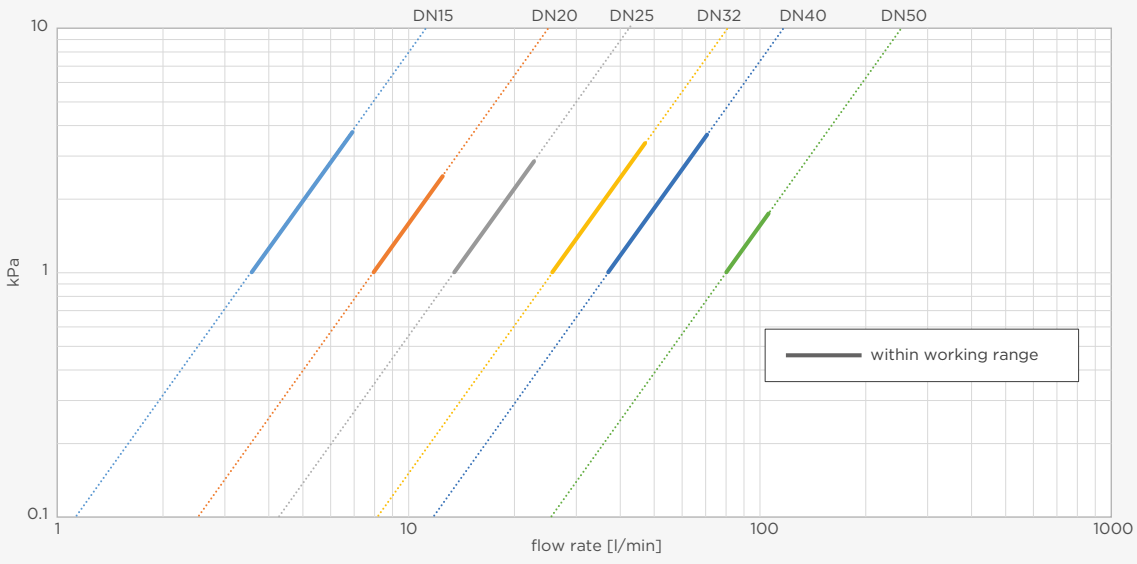

pressure loss

PSU1260 VSH XPress commissioning valve

(2 x press, with union connection, outlet)



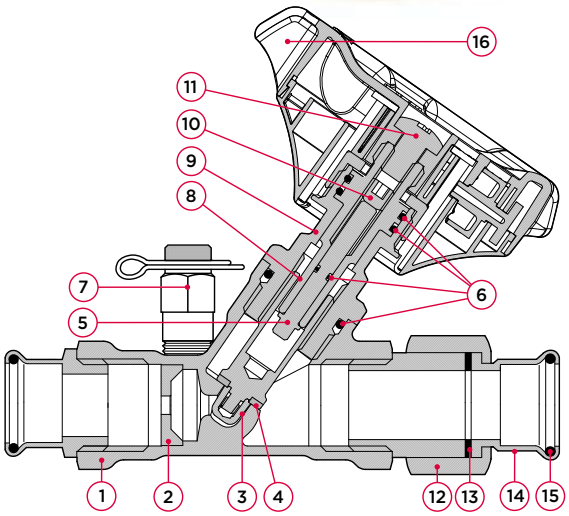

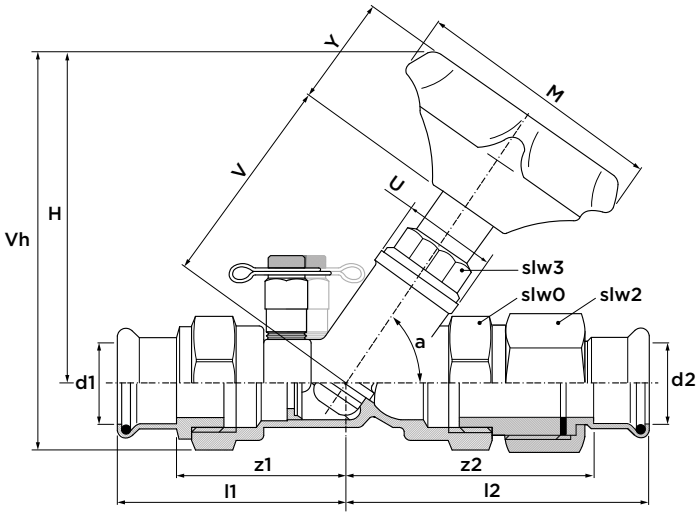

specifications

- part of the VSH XPress system
- max. pressure 16 bar
- operating temperature -10 to 110°C
- VSH XPress gunmetal ends for carbon steel, stainless steel and copper tube
- time saving through fixed orifice measuring (FODRV)
- handle with digital position indicator
- memory stop for setting fixation
- test points for needle connection

no.	component	material
1	body	brass (CW511L)
2	orifice plate	brass (CW511L)
3	disc	brass (CW511L)
4	disc seal	PTFE
5	gland	packing piece brass (CW617N)
6	o-rings	EPDM
7	test points	DZR brass
8	spindle	brass (CW511L)
9	bonnet	brass (CW511L)
10	adjustment screw	steel
11	set screw	steel
12	union nut	gunmetal (CC499K)
13	flat seal	fiberring
14	end connection	gunmetal (CC499K)
15	o-ring	EPDM
16	handle	30% glass filled PA 66

maximum pressure [bar]

operating pressure	test pressure shell	test pressure seat
16	24	17.6

pressure equipment directive category

all sizes	SEP

dimension			article no.	weight [kg]	l1	l2	z1	z2	U [Ø]	V	Y	M	Vh	H	slw0	slw2	slw3	a [°]
15	(DN15)	ULF	126292	0.70	66	89	48	69	26	64	38	89	125	109	30	32	25	55
15	(DN15)	ULF	126230	0.70	66	89	48	69	26	64	38	89	125	109	30	32	25	55
15	(DN15)	MF	126290	0.70	66	89	48	69	26	64	38	89	125	109	30	32	25	55
15	(DN15)	SF	126231	0.69	66	89	48	69	26	64	38	89	125	109	30	32	25	55
18	(DN15)	ULF	126296	0.70	66	89	48	69	26	64	38	89	125	109	30	32	25	55
18	(DN15)	LF	126232	0.70	66	89	48	69	26	64	38	89	125	109	30	32	25	55
18	(DN15)	MF	126294	0.70	66	89	48	69	26	64	38	89	125	109	30	32	25	55
18	(DN15)	SF	126233	0.69	66	89	48	69	26	64	38	89	125	109	30	32	25	55
22	(DN20)	SF	126234	0.82	98	67	72	48	26	64	38	89	125	109	37	32	27	55
28	(DN25)	SF	126235	0.99	102	74	79	53	30	70	38	89	133	114	46	39	32	55
35	(DN32)	SF	126236	1.75	115	89	93	65	42	82	38	89	148	123	52	50	38	55
42	(DN40)	SF	126237	2.26	126	96	91	68	50	85	38	89	153	126	58	55	42	55
54	(DN50)	SF	126238	3.87	150	117	109	83	57	103	38	89	175	141	75	70	43	55

dimension		Kv [m³/h]	Kvs [m³/h]	flow [l/s] min.	flow [l/s] max.	flow [l/min] min.	flow [l/min] max.	flow [l/h] min.	flow [l/h] max.
15	(DN15) ULF	0.19	0.18	0.008	0.016	0.45	0.96	27.3	56.1
15	(DN15) LF	0.40	0.41	0.015	0.031	0.90	1.86	54.8	110.6
15	(DN15) MF	0.99	1.00	0.030	0.061	1.80	3.66	107.9	219.8
15	(DN15) SF	1.86	2.15	0.058	0.126	3.50	7.56	209.3	452.7
18	(DN15) LF	0.40	0.41	0.015	0.031	0.90	1.86	54.8	110.6
18	(DN15) SF	1.86	2.15	0.058	0.126	3.50	7.56	209.3	452.7
22	(DN20) SF	2.27	4.78	0.123	0.191	7.38	11.46	442.6	687.0
28	(DN25) SF	6.11	8.11	0.172	0.377	10.32	22.62	619.4	1356.8
35	(DN32) SF	12.65	15.41	0.365	0.690	21.90	41.40	1313.4	2482.7
42	(DN40) SF	19.00	22.23	0.625	1.383	37.50	82.98	2248.9	4977.2
54	(DN50) SF	28.42	48.21	1.179	1.751	70.80	105.06	4246.1	6304.5

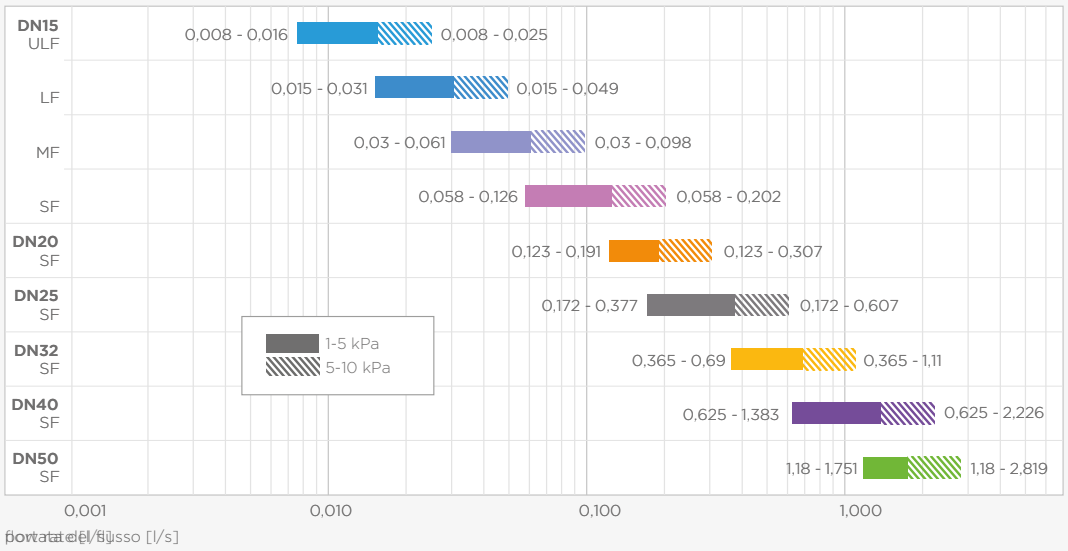

flow rate

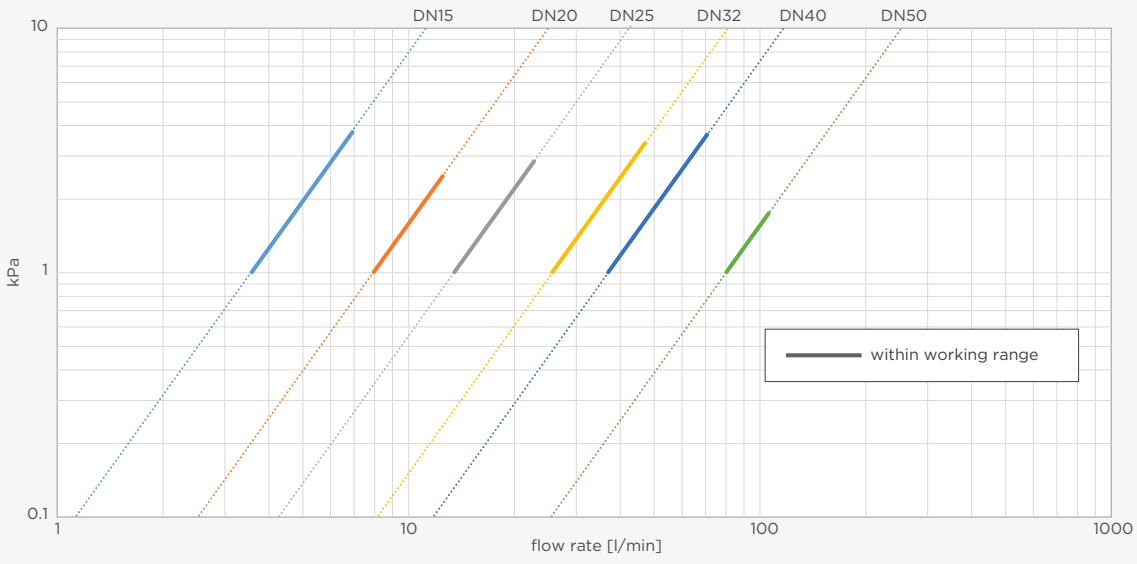

pressure loss

PS1200 VSH XPress double regulating valve

(2 x press)



specifications

- part of the VSH XPress system
- max. pressure 16 bar
- operating temperature -10 to 110°C
- VSH XPress gunmetal ends for carbon steel, stainless steel and copper tube
- handle with digital position indicator

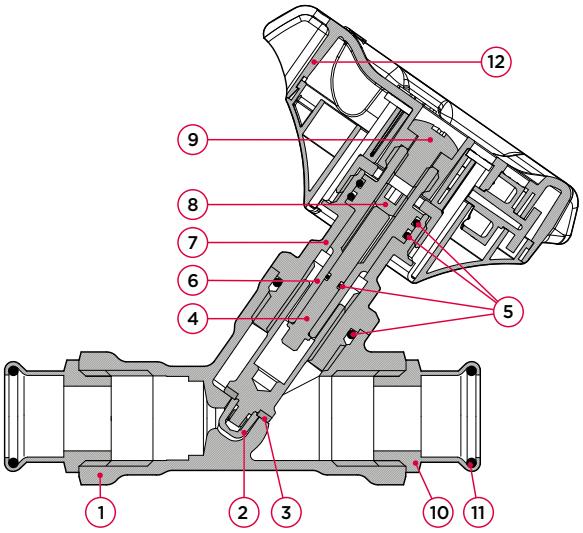

no.	component	material
1	body	brass (CW511L)
2	disc	brass (CW511L)
3	disc seal	EPDM
4	gland	packing piece brass (CW617N)
5	o-rings	EPDM
6	spindle	brass (CW511L)
7	bonnet	brass (CW511L)
8	adjustment screw	steel
9	set screw	steel
10	end connection	gunmetal (CC499K)
11	o-ring	EPDM
12	handle	30% glass filled PA 66

maximum pressure [bar]		
operating pressure	**test pressure shell**	**test pressure seat**
16	24	17.6

pressure equipment directive category	
all sizes	SEP

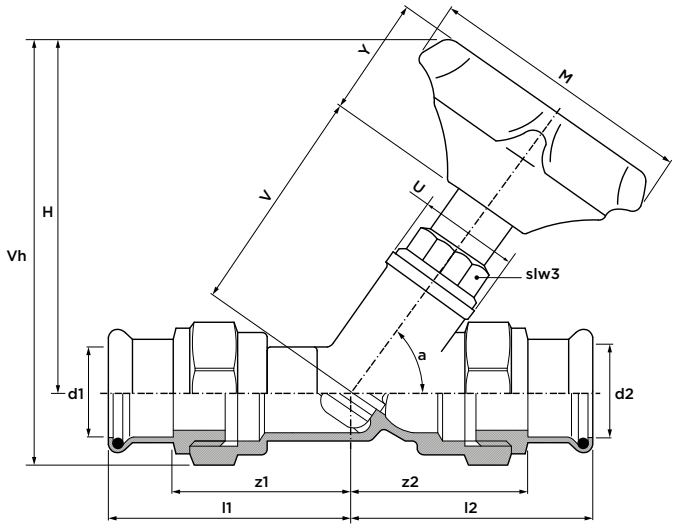

dimension	article no.	weight [kg]	Kv [m³/h]	l1/l2	z1/z2	U [Ø]	V	Y	M	Vh	H	slw3	a [°]
15 (DN12)	126009	0.63	2.30	62	44	26	58	38	89	118	109	25	55
18 (DN15)	126131	0.57	2.30	62	44	26	58	38	89	118	109	25	55
22 (DN20)	126010	0.71	2.48	43	33	26	64	38	89	125	109	27	55
28 (DN25)	126011	1.08	7.15	44	34	30	63	38	89	128	114	32	55
35 (DN32)	126012	1.59	15.08	61	47	42	82	38	89	148	123	38	55
42 (DN40)	126013	1.90	20.84	64	50	50	85	38	89	153	126	42	55
54 (DN50)	126014	3.00	28.89	79	66	57	103	38	89	175	141	43	55

PSU1200 VSH XPress double regulating valve

(2 x press, with union connection)



specifications

- part of the VSH XPress system
- max. pressure 16 bar
- operating temperature -10 to 110°C
- VSH XPress gunmetal ends for carbon steel, stainless steel and copper tube
- handle with digital position indicator

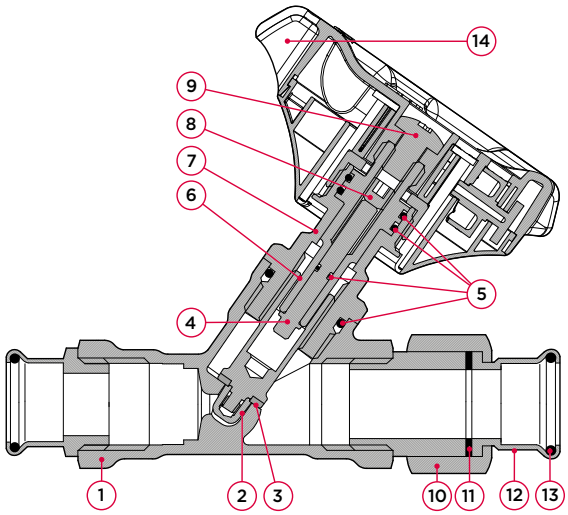

no.	component	material
1	body	brass (CW511L)
2	disc	brass (CW511L)
3	disc seal	PTFE
4	gland	packing piece brass (CW617N)
5	o-rings	EPDM
6	spindle	brass (CW511L)
7	bonnet	brass (CW511L)
8	adjustment screw	steel
9	set screw	steel
10	union nut	gunmetal (CC499K)
11	flat seal	fiberring
12	end connection	gunmetal (CC499K)
13	o-ring	EPDM
14	handle	30% glass filled PA 66

maximum pressure [bar]

operating pressure	test pressure shell	test pressure seat
16	24	17.6

pressure equipment directive category	
all sizes	SEP

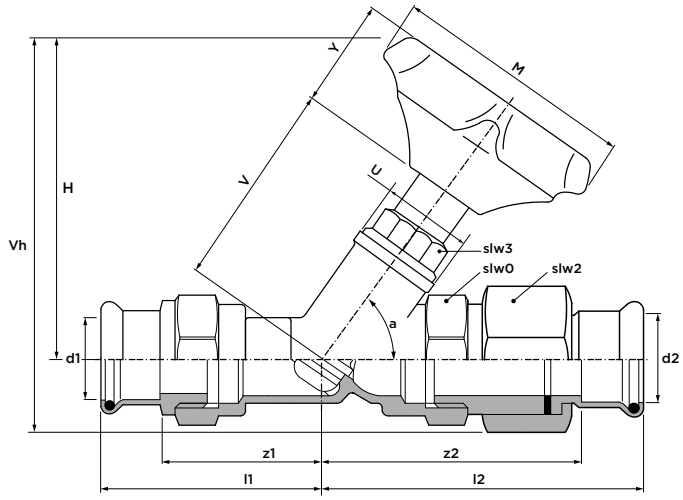

dimension		article no.	wght [kg]	Kv [m³/h]	l1	l2	z1	z2	U [Ø]	V	Y	M	Vh	H	slw0	slw1	slw3	a [°]
15	(DN12)	126240	0.65	2.30	62	85	44	65	26	58	38	89	119	104	25	30	25	55
18	(DN15)	126241	0.65	2.30	62	90	44	65	26	58	38	89	119	104	25	30	25	55
22	(DN20)	126242	0.78	2.48	62	98	48	72	26	64	38	89	127	104	32	37	27	55
28	(DN25)	126243	1.21	7.15	62	102	53	79	30	63	38	89	131	104	39	46	32	55
35	(DN32)	126244	1.70	15.08	89	115	65	93	42	82	38	89	136	110	50	52	38	55
42	(DN40)	126245	2.20	20.84	96	126	68	91	50	85	38	89	156	127	55	58	42	55
54	(DN50)	126246	3.31	28.89	117	150	93	109	57	103	38	89	178	141	70	75	43	55

PS1068 VSH XPress gate valve

(2 x press)



specifications

- part of the VSH XPress system
- max. pressure 16 bar
- operating temperature -10°C to 110°C
- VSH XPress gunmetal ends for carbon steel, stainless steel and copper tube

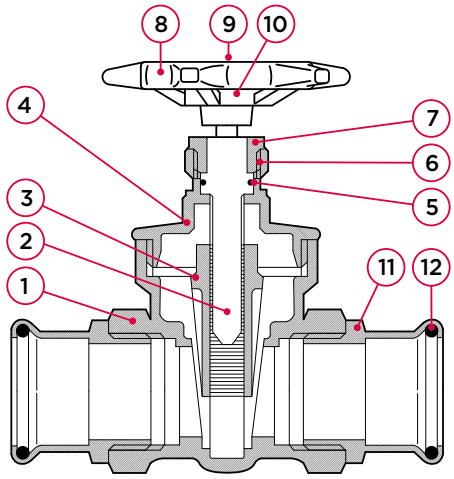

no.	component	material
1	body	brass (CW617N)
2	stem	brass
3	wedge	brass (CW617N)
4	bonnet	brass (CW617N)
5	gland packing	PTFE
6	gland	brass
7	gland nut	brass
8	handwheel	aluminium
9	handwheel nut	brass
10	rating disc	aluminium
11	end connection	gunmetal (CC499K)
12	o-ring	EPDM

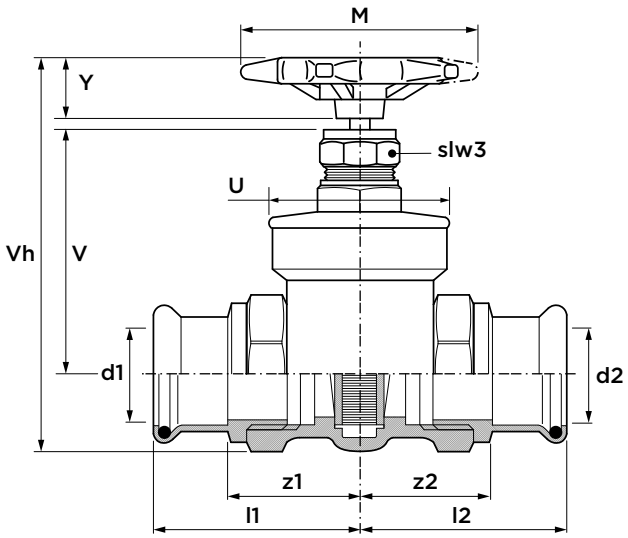

maximum pressure [bar]

operating pressure	test pressure shell	test pressure seat
16	24	17.6

pressure equipment directive category

all sizes	SEP

dimension	article no.	weight [kg]	Kv [m³/h]	l1/l2	z1/z2	U [Ø]	Vh	V	Y	M	slw3
15 (DN12)	203301	0.38	14	49	29	38	100	45	20	59	15
22 (DN20)	203303	0.56	32	52	30	45	113	53	22	59	18
28 (DN25)	203304	0.87	57	59	37	53	133	61	29	68	22
35 (DN32)	203305	1.30	90	65	40	61	151	70	30	72	25
42 (DN40)	203306	1.62	129	71	43	68	174	77	43	91	29
54 (DN50)	203307	2.84	230	83	48	82	208	93	52	101	36

PSU1068 VSH XPress gate valve

(2 x press, with union connection)



specifications

- part of the VSH XPress system
- max. pressure 16 bar
- operating temperature -10°C to 110°C
- VSH XPress gunmetal ends for carbon steel, stainless steel and copper tube

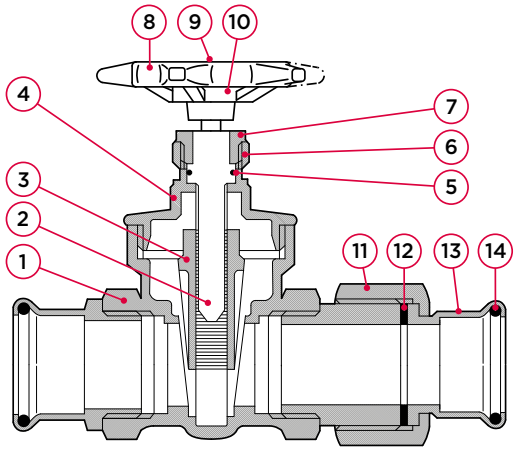

no.	component	material
1	body	brass (CW617N)
2	stem	brass
3	wedge	brass (CW617N)
4	bonnet	brass (CW617N)
5	gland packing	PTFE
6	gland	brass
7	gland nut	brass
8	handwheel	aluminium
9	handwheel nut	brass
10	rating disc	aluminium
11	union nut	gunmetal (CC499K)
12	flat seal	fiberring
13	end connection	gunmetal (CC499K)
14	o-ring	EPDM

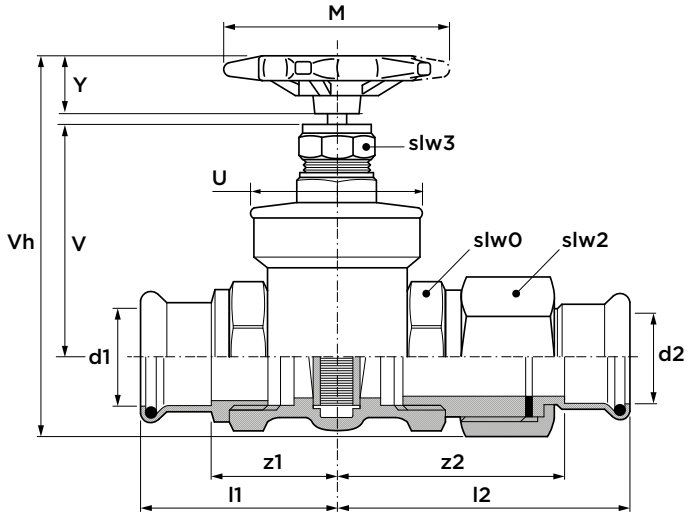

maximum pressure [bar]		
operating pressure	**test pressure shell**	**test pressure seat**
16	24	17.6

pressure equipment directive category	
all sizes	SEP

dimension	article no.	weight [kg]	Kv [m³/h]	l1	l2	z1	z2	U [Ø]	Vh	V	Y	M	slw0	slw2	slw3
15 (DN12)	203340	0.48	14	49	72	29	49	38	100	45	20	59	29	33	15
22 (DN20)	203342	0.69	32	52	83	30	59	45	113	53	22	59	37	41	18
28 (DN25)	203343	1.04	57	57	88	37	62	53	133	61	29	68	43	49	22
35 (DN32)	203344	1.49	90	65	91	40	63	61	151	70	30	72	51	57	25
42 (DN40)	203345	1.98	129	71	101	43	68	68	174	77	43	91	58	66	29
54 (DN50)	203346	3.25	230	83	117	48	79	82	208	93	52	101	71	80	36

PS1078 VSH XPress gate valve, DZR

(2 x press)



specifications

- part of the VSH XPress system
- max. pressure 16 bar
- operating temperature -10°C to 110°C
- VSH XPress gunmetal ends for carbon steel, stainless steel and copper tube

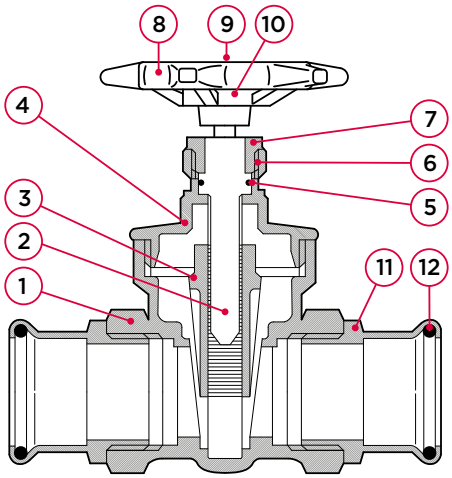

no.	component	material
1	body	DZR brass (CW602N)
2	stem	DZR brass
3	wedge	DZR brass (CW602N)
4	bonnet	DZR brass (CW602N)
5	gland packing	PTFE
6	gland	brass
7	gland nut	brass
8	handwheel	aluminium
9	handwheel nut	brass
10	rating disc	aluminium
11	end connection	gunmetal (CC499K)
12	o-ring	EPDM

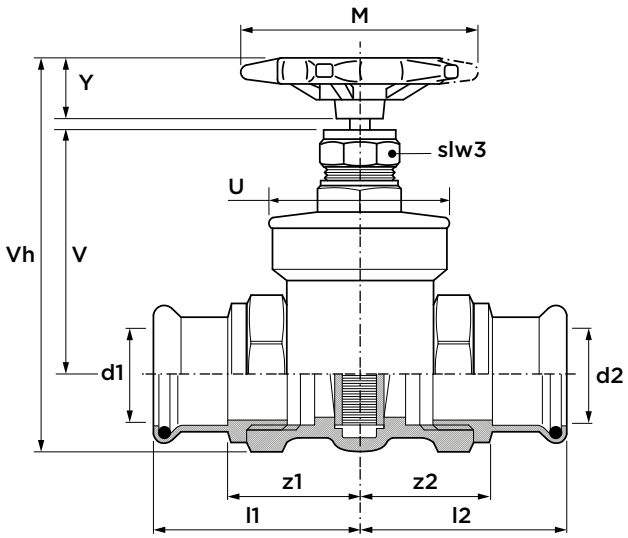

maximum pressure [bar]

operating pressure	test pressure shell	test pressure seat
16	24	17.6

pressure equipment directive category	
all sizes	SEP

dimension	article no.	weight [kg]	Kv [m³/h]	l1/l2	z1/z2	U [Ø]	Vh	V	Y	M	slw3
15 (DN12)	204056	0.38	14	49	29	38	100	45	20	59	15
22 (DN20)	204058	0.56	32	52	30	45	113	53	22	59	18
28 (DN25)	204059	0.87	57	59	37	53	133	61	29	68	22
35 (DN32)	204060	1.30	90	65	40	61	151	70	30	72	25
42 (DN40)	204061	1.62	129	71	43	68	174	77	43	91	29
54 (DN50)	204062	2.84	230	83	48	82	208	93	52	101	36

PSU1078 VSH XPress gate valve, DZR

(2 x press, with union connection)



specifications

- part of the VSH XPress system
- max. pressure 16 bar
- operating temperature -10°C to 110°C
- VSH XPress gunmetal ends for carbon steel, stainless steel and copper tube

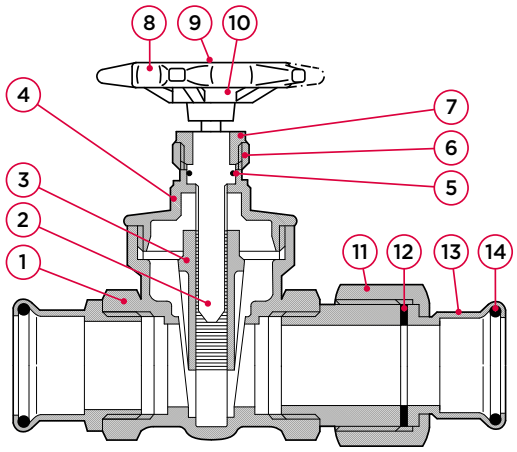

no.	component	material
1	body	DZR brass (CW602N)
2	stem	DZR brass
3	wedge	DZR brass (CW602N)
4	bonnet	DZR brass (CW602N)
5	gland packing	PTFE
6	gland	brass
7	gland nut	brass
8	handwheel	aluminium
9	handwheel nut	brass
10	rating disc	aluminium
11	union nut	gunmetal (CC499K)
12	flat seal	fiberring
13	end connection	gunmetal (CC499K)
14	o-ring	EPDM

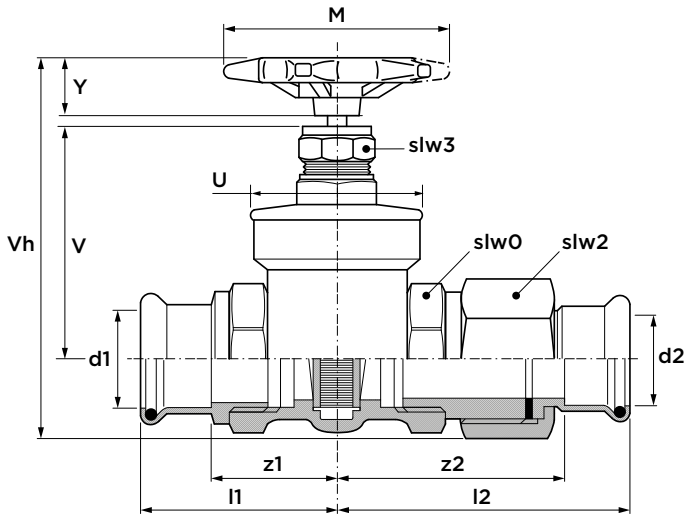

maximum pressure [bar]		
operating pressure	**test pressure shell**	**test pressure seat**
16	24	17.6

pressure equipment directive category	
all sizes	SEP

dimension	article no.	weight [kg]	Kv [m3/h]	l1	l2	z1	z2	U [Ø]	Vh	V	Y	M	slw0	slw2	slw3
15 (DN12)	204090	0.48	14	49	72	29	49	38	100	45	20	59	29	33	15
22 (DN20)	204092	0.69	32	52	83	30	59	45	113	53	22	59	37	41	18
28 (DN25)	204093	1.04	57	57	88	37	62	53	133	61	29	68	43	49	22
35 (DN32)	204094	1.49	90	65	91	40	63	61	151	70	30	72	51	57	25
42 (DN40)	204095	1.98	129	71	101	43	68	68	174	77	43	91	58	66	29
54 (DN50)	204096	3.25	230	83	117	48	79	82	208	93	52	101	71	80	36

PS1070-125 VSH XPress gate valve, gunmetal

(2 x press)



specifications

- part of the VSH XPress system
- max. pressure 16 bar
- operating temperature -10°C to 110°C
- VSH XPress gunmetal ends for carbon steel, stainless steel and copper tube

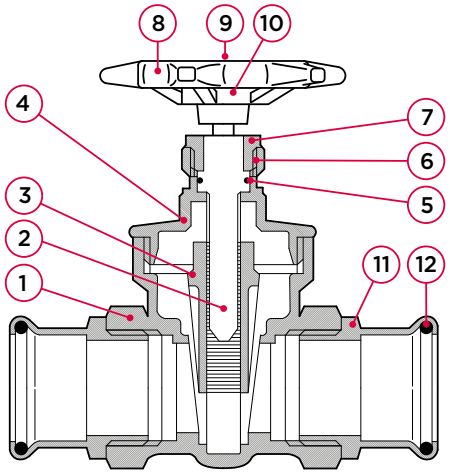

no.	component	material
1	body	gunmetal (CC491K)
2	stem	brass
3	wedge	gunmetal (CC491K)
4	bonnet	brass (CW602N)
5	gland packing	PTFE
6	gland	brass
7	gland nut	brass
8	handwheel	aluminium
9	handwheel nut	brass
10	rating disc	aluminium
11	end connection	gunmetal (CC499K)
12	o-ring	EPDM

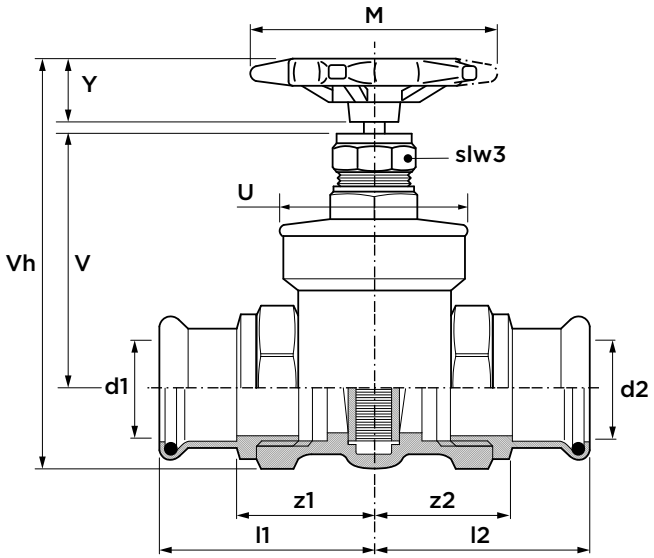

maximum pressure [bar]

operating pressure	test pressure shell	test pressure seat
16	24	17.6

pressure equipment directive category	
all sizes	SEP

dimension	article no.	weight [kg]	Kv [m³/h]	l1/l2	z1/z2	U [Ø]	Vh	V	Y	M	slw3
15 (DN12)	103301	0.39	14	49	29	38	100	45	20	59	15
22 (DN20)	103303	0.56	32	52	30	45	113	53	22	59	18
28 (DN25)	103304	0.84	57	59	37	53	133	61	29	68	22
35 (DN32)	103305	1.26	90	65	40	61	151	70	30	72	25
42 (DN40)	103306	1.69	129	71	43	68	174	77	43	91	29
54 (DN50)	103307	2.67	230	83	48	82	208	93	52	101	36

PSU1070-125 VSH XPress gate valve, gunmetal

(2 x press, with union connection)



specifications

- part of the VSH XPress system
- max. pressure 16 bar
- operating temperature -10°C to 110°C
- VSH XPress gunmetal ends for carbon steel, stainless steel and copper tube

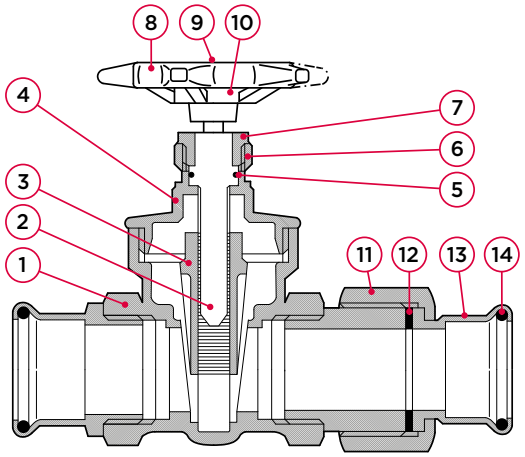

no.	component	material
1	body	gunmetal (CC491K)
2	stem	brass
3	wedge	gunmetal (CC491K)
4	bonnet	brass (CW602N)
5	gland packing	PTFE
6	gland	brass
7	gland nut	brass
8	handwheel	aluminium
9	handwheel nut	brass
10	rating disc	aluminium
11	union nut	gunmetal (CC499K)
12	flat seal	fiberring
13	end connection	gunmetal (CC499K)
14	o-ring	EPDM

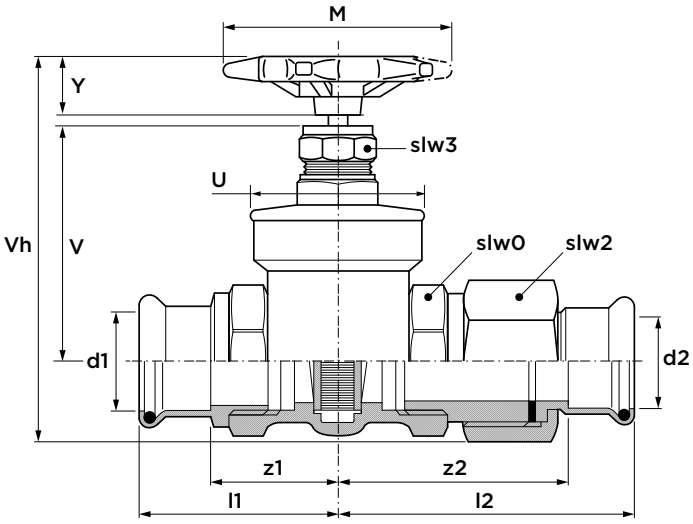

maximum pressure [bar]		
operating pressure	**test pressure shell**	**test pressure seat**
16	24	17.6

pressure equipment directive category	
all sizes	SEP

dimension	article no.	weight [kg]	Kv [m³/h]	l1	l2	z1	z2	U [Ø]	Vh	V	Y	M	slw0	slw2	slw3
15 (DN12)	103320	0.48	14	49	72	29	49	38	100	45	20	59	29	33	15
22 (DN20)	103322	0.69	32	52	83	30	59	45	113	53	22	59	37	41	18
28 (DN25)	103323	1.04	57	59	88	37	62	53	133	61	29	68	43	49	22
35 (DN32)	103324	1.49	90	65	91	40	63	61	151	70	30	72	51	57	25
42 (DN40)	103325	1.98	129	71	101	43	68	68	174	77	43	91	58	66	29
54 (DN50)	103326	3.25	230	83	117	48	79	82	208	93	52	101	71	80	36

PS1068LS VSH XPress gate valve with lockshield

(2 x press)



specifications

- part of the VSH XPress system
- max. pressure 16 bar
- operating temperature -10°C to 110°C
- VSH XPress gunmetal ends for carbon steel, stainless steel and copper tube

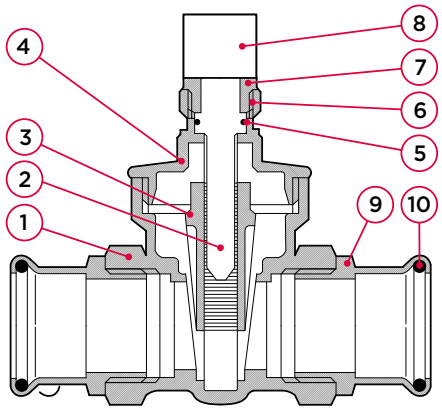

no.	component	material
1	body	brass (CW617N)
2	stem	brass
3	wedge	brass (CW617N)
4	bonnet	brass (CW617N)
5	gland packing	PTFE
6	gland	brass
7	gland nut	brass
8	lockshield	brass
9	end connection	gunmetal (CC499K)
10	o-ring	EPDM

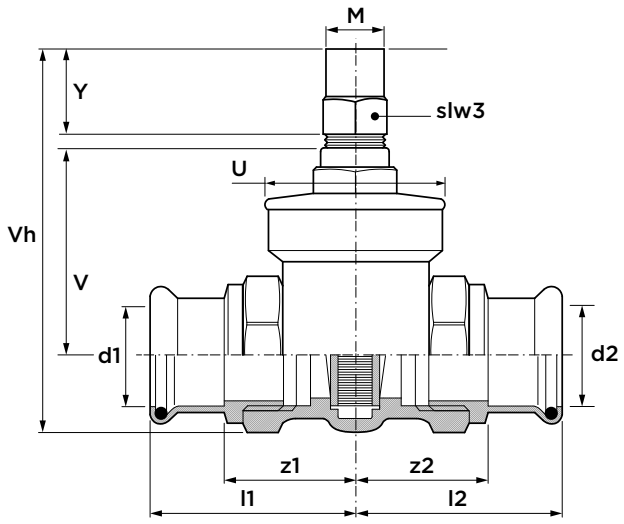

maximum pressure [bar]

operating pressure	test pressure shell	test pressure seat
16	24	17.6

pressure equipment directive category	
all sizes	SEP

dimension	article no.	weight [kg]	Kv [m³/h]	l1/l2	z1/z2	U [Ø]	Vh	V	Y	M	slw3
15 (DN12)	203311	0.36	14	49	29	38	90	45	15	18	15
22 (DN20)	203313	0.53	32	52	30	45	104	53	16	18	18
28 (DN25)	203314	0.86	57	59	37	53	123	61	15	19	22
35 (DN32)	203315	1.24	90	65	40	61	137	70	15	21	25
42 (DN40)	203316	1.59	129	71	43	68	160	77	18	24	29
54 (DN50)	203317	2.69	230	83	48	82	193	93	23	28	36

PSU1068LS VSH XPress gate valve with lockshield

(2 x press, with union connection)



specifications

- part of the VSH XPress system
- max. pressure 16 bar
- operating temperature -10°C to 110°C
- VSH XPress gunmetal ends for carbon steel, stainless steel and copper tube

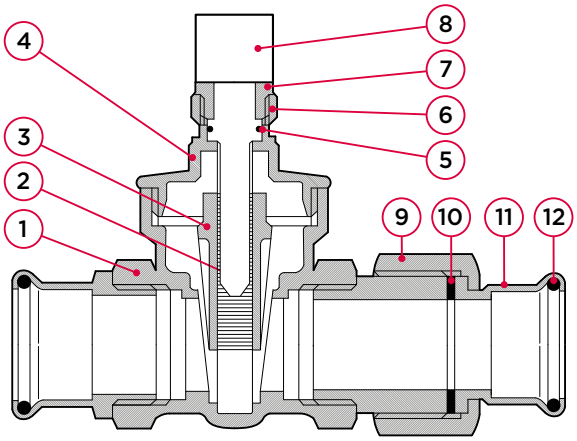

no.	component	material
1	body	brass (CW617N)
2	stem	brass
3	wedge	brass (CW617N)
4	bonnet	brass (CW617N)
5	gland packing	PTFE
6	gland	brass
7	gland nut	brass
8	lockshield	brass
9	union nut	gunmetal (CC499K)
10	flat seal	fiberring
11	end connection	gunmetal (CC499K)
12	o-ring	EPDM

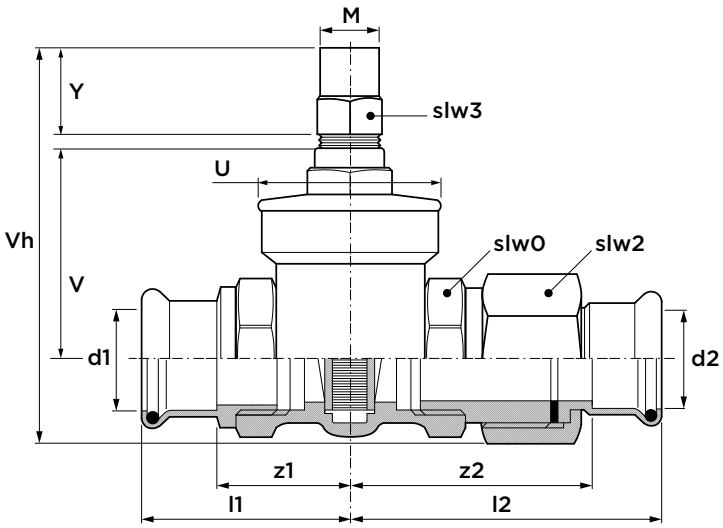

maximum pressure [bar]		
operating pressure	**test pressure shell**	**test pressure seat**
16	24	17.6

pressure equipment directive category	
all sizes	SEP

dimension	article no.	weight [kg]	Kv [m³/h]	l1	l2	z1	z2	U [Ø]	Vh	V	Y	M	slw0	slw2	slw3
15 (DN12)	203350	0.48	14	49	72	29	49	38	90	45	15	18	29	33	15
22 (DN20)	203352	0.69	32	52	83	30	59	45	104	53	16	18	37	41	18
28 (DN25)	203353	1.04	57	59	88	37	62	53	123	61	15	19	43	49	22
35 (DN32)	203354	1.49	90	65	91	40	63	61	137	70	15	21	51	57	25
42 (DN40)	203355	1.98	129	71	101	43	68	68	160	77	18	24	58	66	29
54 (DN50)	203356	3.18	230	83	117	48	79	82	193	93	23	28	71	80	36

PS1070-125LS VSH XPress gate valve with lockshield, gunmetal

(2 x press)



specifications

- part of the VSH XPress system
- max. pressure 16 bar
- operating temperature -10°C to 110°C
- VSH XPress gunmetal ends for carbon steel, stainless steel and copper tube

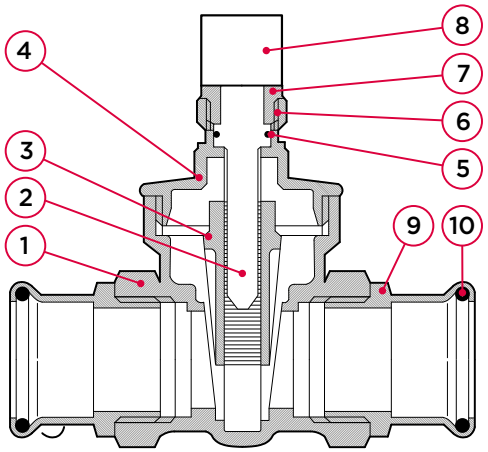

no.	component	material
1	body	gunmetal (CC491K)
2	stem	brass
3	wedge	gunmetal (CC491K)
4	bonnet	brass (CW602N)
5	gland packing	PTFE
6	gland	brass
7	gland nut	brass
8	lockshield	brass
9	end connection	gunmetal (CC499K)
10	o-ring	EPDM

maximum pressure [bar]		
operating pressure	**test pressure shell**	**test pressure seat**
16	24	17.6

pressure equipment directive category	
all sizes	SEP

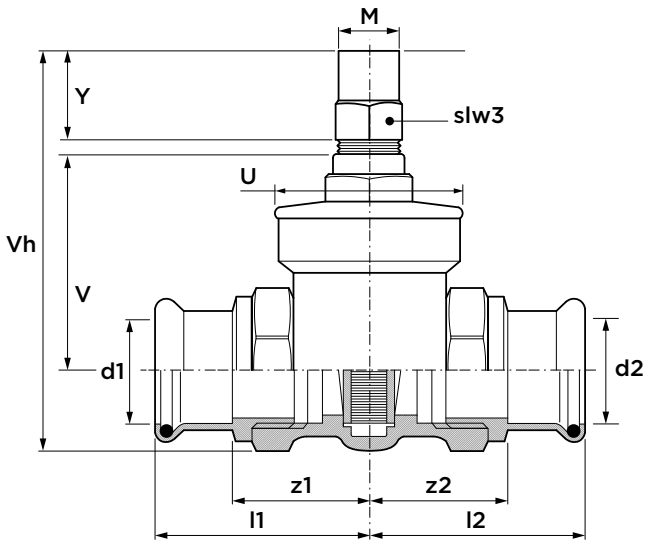

dimension	article no.	weight [kg]	Kv [m³/h]	l1/l2	z1/z2	U [Ø]	Vh	V	Y	M	slw3
15 (DN12)	103311	0.39	14	49	29	38	90	45	15	18	15
22 (DN20)	103313	0.56	32	52	30	45	104	53	16	18	18
28 (DN25)	103314	0.84	57	59	37	53	123	61	15	19	22
35 (DN32)	103315	1.26	90	65	40	61	137	70	15	21	25
42 (DN40)	103316	1.69	129	71	43	68	160	77	18	24	29
54 (DN50)	103317	2.67	230	83	48	82	193	93	23	28	36

PSU1070-125LS VSH XPress gate valve with lockshield, gunmetal

(2 x press, with union connection)



specifications

- part of the VSH XPress system
- max. pressure 16 bar
- operating temperature -10°C to 110°C
- VSH XPress gunmetal ends for carbon steel, stainless steel and copper tube

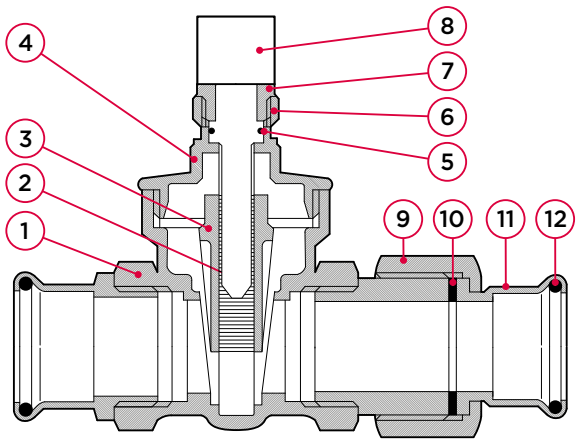

no.	component	material
1	body	gunmetal (CC491K)
2	stem	brass
3	wedge	gunmetal (CC491K)
4	bonnet	brass (CW602N)
5	gland packing	PTFE
6	gland	brass
7	gland nut	brass
8	lockshield	brass
9	union nut	gunmetal (CC499K)
10	flat seal	fiberring
11	end connection	gunmetal (CC499K)
12	o-ring	EPDM

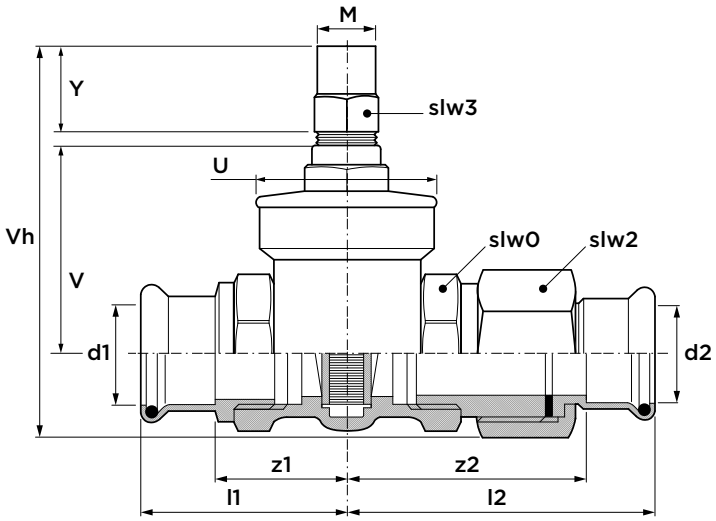

maximum pressure [bar]		
operating pressure	**test pressure shell**	**test pressure seat**
16	24	17.6

pressure equipment directive category	
all sizes	SEP

dimension	article no.	weight [kg]	Kv [m³/h]	l1	l2	z1	z2	U [Ø]	Vh	V	Y	M	slw0	slw2	slw3
15 (DN12)	103330	0.48	14	49	72	31	49	38	90	45	15	18	29	33	15
22 (DN20)	103332	0.69	32	52	83	33	59	45	104	53	16	18	37	41	18
28 (DN25)	103333	1.04	57	59	88	38	62	53	123	61	15	19	43	49	22
35 (DN32)	103334	1.49	90	65	91	42	63	61	137	70	15	21	51	57	25
42 (DN40)	103335	1.98	129	71	101	43	68	68	160	77	18	24	58	66	29
54 (DN50)	103336	3.19	230	83	117	50	79	82	193	93	23	28	71	80	36





VSH XPress

tools and accessories

P5991/5999 press tools Novopress ACO103



	dimension	article no.
ACO103 + 2 batteries 2.0Ah + charger + case	12-35	6342481
ACO103 + 2 batteries 2.0Ah + charger + jaws 12-35 + case	12-35	6342523
PB1 jaw	12	6209203
PB1 jaw	15	6209214
PB1 jaw	18	6209225
PB1 jaw	22	6209236
PB1 jaw	28	6209247
PB1 jaw	35	6341544

P6013/6014/6015 press tools Novopress ECO203/ACO203(XL)



	dimension	article no.
ECO203 + case	12-54	6342094
ACO203 BT + battery 2.0Ah + charger + case	12-54	6342490
ACO203 BT + jaws 12-35 + 2 batteries 5.0Ah + charger + case	12-35	6342534
ACO203 BT + jaws 22-28 + adapter + HP slings 35-54 + 2 batteries 5.0Ah + charger + cases	22-54 (sprinkler)	6342545
ACO203XL BT + 2 batteries 5.0Ah + charger + case	12-108	6342556
ACO203XL BT + slings + ZB221 & ZB222 adapters + 2 batteries 5.0Ah + charger + cases	66.7-108	6342512

P5990/6016 press jaws and slings Novopress for ECO203/ACO203(XL)



	dimension	article no.
ECOTEC PB2 jaws	12	6205331
ECOTEC PB2 jaws	15	6205342
ECOTEC PB2 jaws	18	6205353
ECOTEC PB2 jaws	22	6205364
ECOTEC PB2 jaws	28	6205375
ECOTEC PB2 jaws	35	6205386
ZB203 adapter	35-42-54	6340829
snap-on sling	42	6341093
snap-on sling	54	6341104
snap-on sling HP	35	6341060
snap-on sling HP	42	6341071
snap-on sling HP	54	6341082
set: snap-on slings 42-54 + ZB203 adapter + case	42-54	6205672
set: snap-on slings HP 35-54 + ZB203 adapter + case	35-42-54	6341775
set: snap-on slings HP 42-54 + ZB203 adapter + case	42-54	6341225
ZB221 adapter	66.7 + 76.1 + 88.9 + 108/1	6341896
ZB222 adapter	108/2	6341907
snap-on sling	64	6341381
snap-on sling	66.7	6341390
snap-on sling	76.1	6341401
snap-on sling	88.9	6341412
snap-on sling	108	6341423
set: snap-on sling + ZB221 adapter + case	66.7 + 76.1 + 88.9	6342270
set: snap-on sling + ZB222 adapter + case	108	6342281
set: snap-on sling + ZB221 & ZB222 adapters + case	108	6342292
dri-slide lubricant for copper	42-108	6342358
MoS_2 lubricant for copper	42-108	6342567

P6000/6001 press tools and slings Novopress ACO401/403



	dimension	article no.
ACO403 + 2 batteries 5.0Ah + charger + case	76.1-108	6342424
HP401/403 sling + case	76.1	6340092
HP401/403 sling + case	88.9	6340103
HP401/403 sling + case	108	6340114

P5990/5991/5997/6000/6013/6016 case



	dimension	article no.
case ACO102		6342039
case ACO103		6342457
case ECO/ACO203XL		6342028
case ECO301		6341533
case ACO403		6342468
case slings + adapter	35-42-54 + ZB2/3 series	6342303
case slings + adapters	64-108 + ZB2/3 series	6342261

P5991/6002/6004 battery + charger



	article no.
AFP101 battery 3.0Ah 9.6V	6209291
ACO102/103 battery 2.0Ah 12V	6341566
ACO102/103 battery 4.0Ah 12V	6341577
ACO102/103 charger 12V	6341280
AFP202 battery 18V 3.0Ah Li-Ion	6340620
AFP202 charger	6340653
ACO202/203 battery 2.0Ah 18V	6341588
ACO202/203/401/403 battery 5.0Ah 18V	6342446
ACO202/203/401/403 charger	6340125

P1440 stripping tool for PP-coating



dimension	article no.
15	6211843
18	6211854
22	6211865
28	6211876
35-54	6211887

P1441 blades for stripping tool P1440



dimension	article no.
15-18	6212019
22-28	6212021
35-54	6212030

P2742 insertion depth marker



dimension	article no.
12-108 (for VSH XPress Copper)	6212657
12-108 (for VSH XPress Carbon and Stainless)	6212646

P2743 deburring tool



dimension	article no.
12-54	6211898

disclaimer:
The technical data are non-binding and do not reflect the warranted characteristics of the products. They are subject to change. Please consult our General Terms and Conditions. Additional information is available upon request. It is the designer's responsibility to select products suitable for the intended purpose and to ensure that pressure ratings and performance data are not exceeded. The installation instructions should always be read and followed. The system must always be depressurized and drained before any components, whether defective or otherwise, are removed, modified or corrected.

integrated
piping systems

aalberts

more information?

For a complete and up-to-date product range and our additional services, visit: www.aalberts-ips.eu

Would you like to make an appointment to meet an account manager in your region or receive advice and support from one of our experts?
Please contact:

Aalberts integrated piping systems Customer Service
+31 (0)35 68 84 330
salessupport.emea@aalberts-ips.com

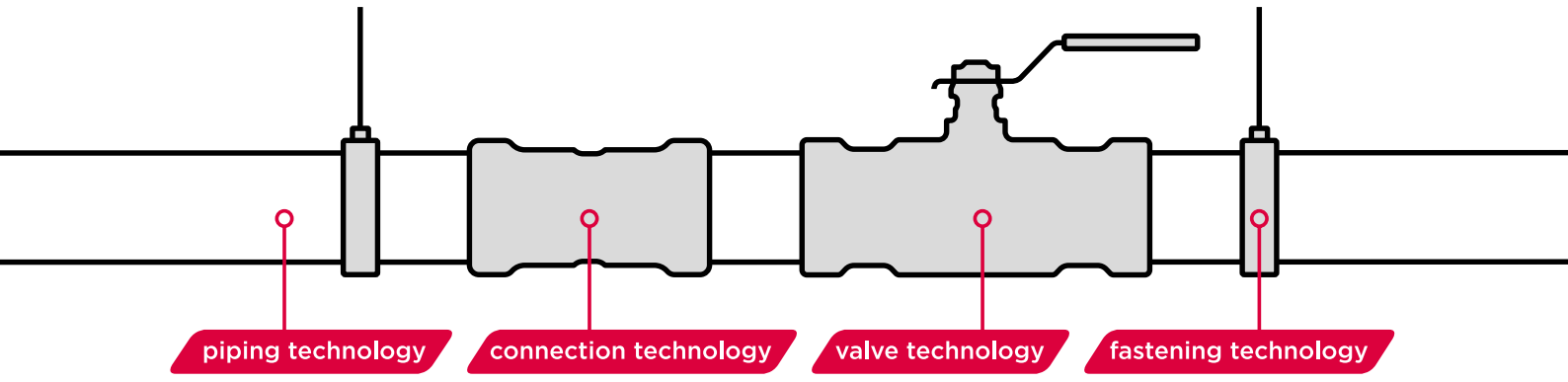

Aalberts integrated piping systems B.V.
Oude Amersfoortseweg 99 / 1212 AA Hilversum
P.O. Box 498 / 1200 AL Hilversum
The Netherlands
www.aalberts-ips.eu

5007134-2023-3.1 EN